INLINE® SLATWALL LIFTER MONITOR HOLDER, SILVER

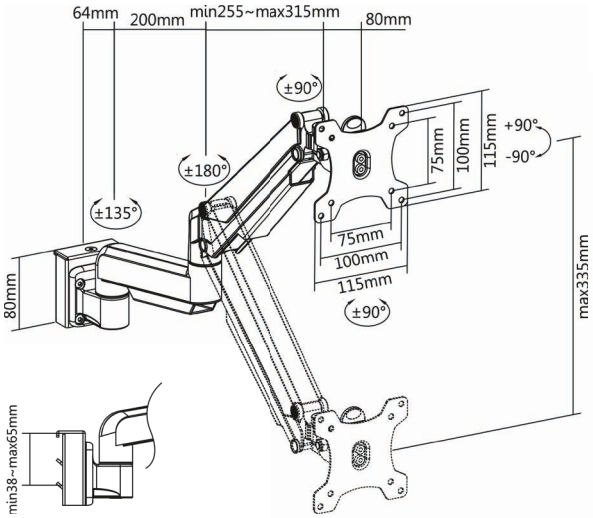

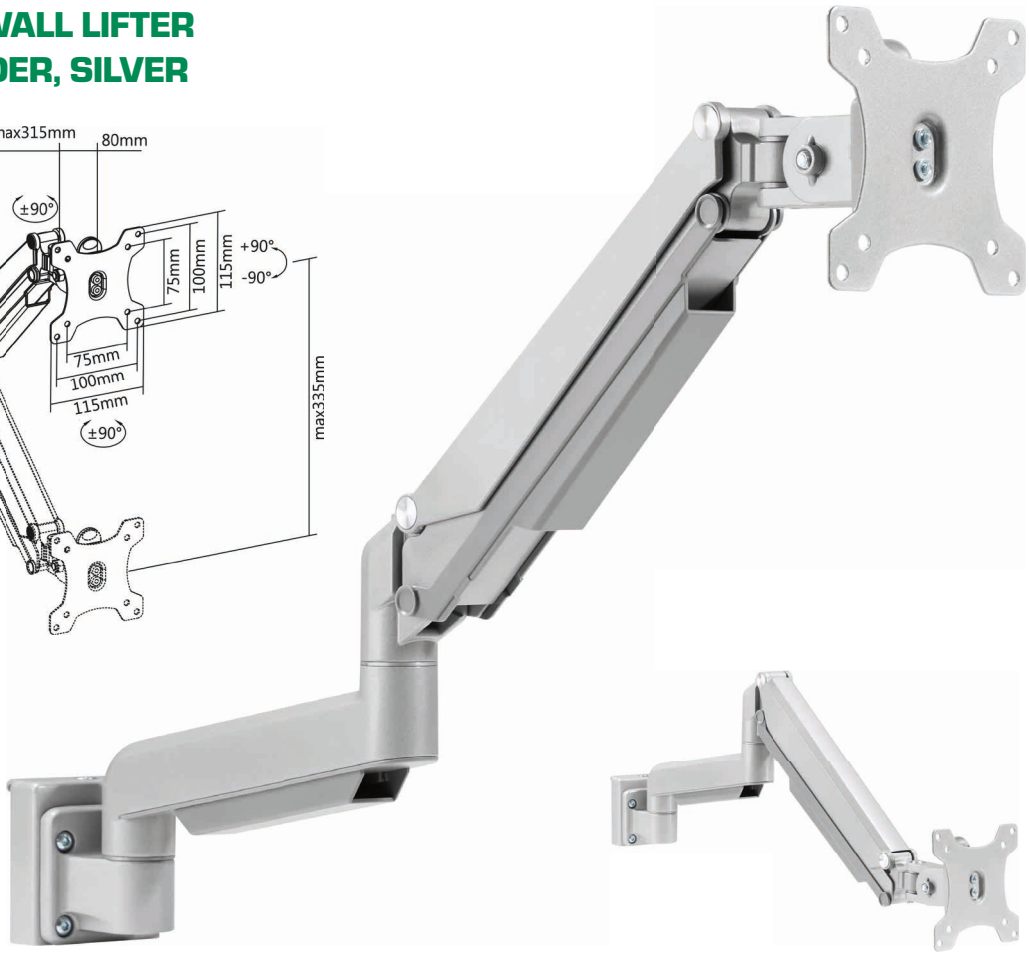

The InLine Slatwall series creates intelligent space for setting up monitor holders and accessories such as trays for documents, pens and desk utensils. The system offers two mounting options for a wide range of installation requirements as a desk or wall mount.

The desk mount offers a dual-user option, meaning monitors and accessories can be configured for two opposing desks on different levels.

- InLine Slatwall Lifter Monitor holder
- Material: Aluminum, Plastic, Steel
- Colour: silver-grey
- Fits screen size: 17“-32“ and VESA 75/100mm
- Screen Quantity: 1
- Weight capacity (per screen): 1-9kg
- Tilt range: +90°~-90°
- Swivel range: +90°~-90°
- Screen rotation: +90°~-90°
- For mounting on Inline Slatwal Pane

EAN: 4043718293384
ART.-NR.: 23183C