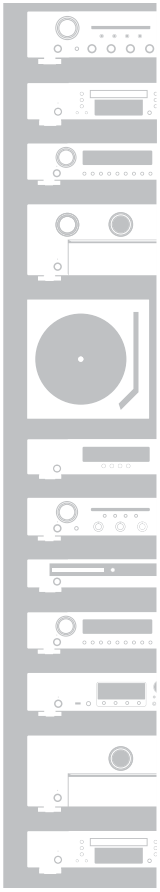

marantz®

AV Surround Receiver

NR1710

Owner's Manual

Accessories 9
Inserting the batteries 10
Operating range of the remote control unit 10
Features 11
High quality sound 11
High performance 12
Easy operation 16
Part names and functions 17
Front panel 17
Display 20
Rear panel 22
Remote control unit 26

Connections

Speaker installation 30
Connecting speakers 37
Before connecting speakers 37
Speaker configuration and “Amp Assign” settings 41
Connecting 5.1-channel speakers 42
Connecting 7.1-channel speakers 43
Connecting 5.1-channel speakers: Bi-amp connection of front speaker 49
Connecting 5.1-channel speakers: Second pair of front speaker 50
Connecting multi-zone speakers 51
Connecting a TV 52
Connection 1 : TV equipped with an HDMI connector and compatible with the ARC (Audio Return Channel) / eARC (Enhanced Audio Return Channel) 53
Connection 2 : TV equipped with an HDMI connector and incompatible with the ARC (Audio Return Channel) / eARC (Enhanced Audio Return Channel) 55
Connection 3 : TV equipped without an HDMI connector 56
Connecting a playback device 57
Connecting a set-top box (Satellite tuner/cable TV) 58
Connecting a DVD player or Blu-ray Disc player 59
Connecting a video camcorder or game console 60
Connecting a turntable 61
Connecting a USB memory device to the USB port 62
Connecting FM/AM antennas 63
Connecting to a home network (LAN) 65
Wired LAN 65
Wireless LAN 66
Connecting an external control device 67
REMOTE CONTROL jacks 67
DC OUT jack 68
Connecting the power cord 69

Playback

Basic operation 71
- Turning the power on 71
- Selecting the input source 71
- Adjusting the volume 72
- Turning off the sound temporarily (Muting) 72
- Playback a DVD player/Blu-ray Disc player 72

Playing a USB memory device 73
- Playing files stored on USB memory devices 74

Listening to music on a Bluetooth device 77
- Playing music from Bluetooth device 78
- Pairing with other Bluetooth devices 79
- Reconnecting to this unit from a Bluetooth device 80

Listening to FM/AM broadcasts 81
- Listening to FM/AM broadcasts 82
- Tuning in by entering the frequency (Direct Tune) 84
- RDS Search 84
- PTY Search 85
- TP Search 86
- Radio text 86
- Changing the tune mode (Tune Mode) 87
- Tuning in to stations and presetting them automatically (Auto Preset Memory) 87
- Presetting the current broadcast station (Preset Memory) 88
- Listening to preset stations 88
- Specify a name for the preset broadcast station (Preset Name) 89
- Skipping preset broadcast stations (Preset Skip) 90
- Cancelling Preset Skip 91

Listening to Internet Radio 92
Listening to Internet Radio 93
Playing back files stored on a PC or NAS 94
Playing back files stored on a PC or NAS 95
Getting the HEOS App 98
HEOS Account 99
Playing from streaming music services 100
Listening to the same music in multiple rooms 103
AirPlay function 107
Playing songs from your iPhone, iPod touch or iPad 108
Playing iTunes music with this unit 108
Play a song from your iPhone, iPod touch or iPad on multiple synced devices (AirPlay 2) 109
Spotify Connect function 110
Playing Spotify music with this unit 110
Convenience functions 111
Adding to HEOS Favorites 112
Playing back HEOS Favorites 112
Deleting a HEOS Favorites 113
Adjusting the volume of each channel to match the input source (Channel Level Adjust) 114
Adjusting the tone (Tone) 115
Displaying your desired video during audio playback (Video Select) 116
Adjusting the picture quality for your viewing environment (Picture Mode) 117
Playing the same music in all zones (All Zone Stereo) 118
Selecting a sound mode 119
Selecting a sound mode 120
Direct playback 121
Pure Direct playback 121
Auto surround playback 122
Description of sound mode types 123
Sound mode that can be selected for each input signal 127
HDMI Control function 131
Setting procedure 131
Smart Menu function 132
Sleep timer function 134
Using the sleep timer 135

Smart select function 136
Calling up the settings 137
Changing the settings 138
Panel lock function 139
Disabling all key button operations 139
Disabling all button operations except VOLUME 139
Canceling the Panel lock function 140
Remote lock function 141
Disabling the sensor function of the remote control unit 141
Enabling the remote sensor function 141
Web control function 142
Controlling the unit from a web control 142
Playback in ZONE2 (Another room) 144
Connecting ZONE2 144
Playback in ZONE2 146

Settings

Menu map 148
Menu operations 152
Audio 153
Center Level Adjust 153
Subwoofer Level Adjust 153
Surround Parameter 154
M-DAX 157
Audio Delay 158
Volume 159
Audyssey® 160
Graphic EQ 162

Video 164
Picture Adjust 164
HDMI Setup 166
Output Settings 171
On Screen Display 173
4K Signal Format 174
TV Format 176
Inputs 177
Input Assign 177
Source Rename 180
Hide Sources 180
Source Level 180
Speakers 181
Audyssey® Setup 181
Procedure for speaker settings (Audyssey® Setup) 183
Error messages 189
Retrieving Audyssey® Setup settings 190
Manual Setup 191
Amp Assign 191
Speaker Config. 192
Distances 197
Levels 198
Crossovers 199
Bass 200
Front Speaker 201
Network 202
Information 202
Connection 202
Wi-Fi Setup 203
Settings 205
Network Control 207
Friendly Name 207
Diagnostics 208
AirPlay 208

HEOS Account 209
You have not signed in 209
You have already signed in 209
General 210
Language 210
ECO 210
ZONE2 Setup 214
Zone Rename 215
Smart Select Names 215
Trigger Out 216
Front Display 216
Firmware 217
Information 220
Usage Data 221
Save & Load 222
Setup Lock 222
Reset 223
Limiting the operating zone with the remote control 224

Tips

Tips 226
Troubleshooting 228
Power does not turn on / Power is turned off 229
Operations cannot be performed through the remote control unit 230
Display on this unit shows nothing 230
No sound comes out 231
Desired sound does not come out 232
Sound is interrupted or noise occurs 235
No video is shown on the TV 236
The menu screen is not displayed on the TV 238
The color of the menu screen and operations content displayed on the television is different from normal 238
AirPlay cannot be played back 239
USB memory devices cannot be played back 240
Bluetooth cannot be played back 241
The Internet radio cannot be played back 242
Music files on PC or NAS cannot be played back 243
Various online services cannot be played 244
The HDMI Control function does not work 244
Cannot connect to a wireless LAN network 245
Update/upgrade error messages 246
Resetting factory settings 247
Resetting network settings 248

Appendix

About HDMI	249
Relationship between video signals and monitor output	252
Playing back a USB memory devices	254
Playing back a Bluetooth device	255
Playing back a file saved on a PC or NAS	256
Playing back Internet Radio	257
Personal memory plus function	257
Last function memory	257
Sound modes and channel output	258
Sound modes and surround parameters	260
Types of input signals, and corresponding sound modes	263
Explanation of terms	266
Trademark information	275
Specifications	277
Index	283
License	286

Thank you for purchasing this Marantz product.
To ensure proper operation, please read this owner's manual carefully before using the product.
After reading this manual, be sure to keep it for future reference.

Accessories

Check that the following parts are supplied with the product.

Quick Start Guide	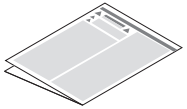 Safety Instructions	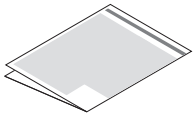 Cautions on Using Batteries	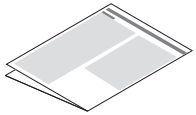 Notes on radio	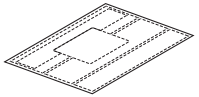 Cable labels
Power cord	FM indoor antenna	AM loop antenna	Sound calibration microphone	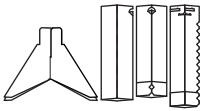 Sound calibration microphone stand
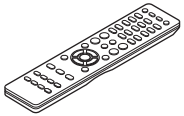 Remote control unit (RC035SR)	R03/AAA batteries	External antennas for Bluetooth/wireless connectivity		

Inserting the batteries

1 **Remove the rear lid in the direction of the arrow and remove it.**

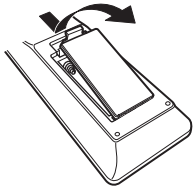

2 **Insert two batteries correctly into the battery compartment as indicated.**

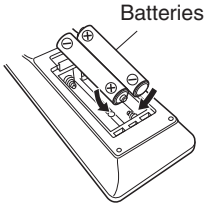

3 **Put the rear cover back on.**

NOTE

- To prevent damage or leakage of battery fluid:
  - Do not use a new battery together with an old one.
  - Do not use two different types of batteries.
- Remove the batteries from the remote control unit if it will not be in use for long periods.
- If the battery fluid should leak, carefully wipe the fluid off the inside of the battery compartment and insert new batteries.

Operating range of the remote control unit

Point the remote control unit at the remote sensor when operating it.

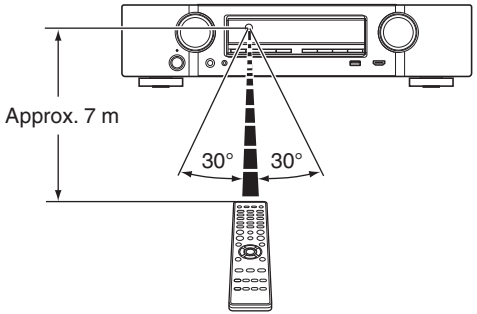

Features

High quality sound

- **With discrete circuit technology, the power amplifier provides identical quality for all 7-channels (70 Watts x 7-channels)**
  For optimum realism and stunning dynamic range, the power amplifier section features discrete power devices (not integrated circuitry).
  By using high current, high power discrete power devices, the amplifier is able to easily drive high quality speakers.

- **Dolby Atmos (☞ p. 267)**
  This unit is equipped with a decoder that supports Dolby Atmos audio format. The placement or movement of sound is accurately reproduced by the addition of overhead speakers, enabling you to experience an incredibly natural and realistic surround sound field.

- **Speaker Virtualizer * (☞ p. 156)**
  Speaker Virtualizer enables you to access a more immersive entertainment experience from traditional channel based speaker layouts through digital signal processing including Dolby Atmos height virtualization and surround virtualization.
  - Speaker Virtualizer is not for use when both height speakers and surround speakers are connected.
  - Height Virtualization may be applied when surround speakers are connected.

  * This feature will be supported via firmware update.

- **DTS:X (☞ p. 270)**
  This unit is equipped with the DTS:X decoder technology. DTS:X brings the home theater experience to new heights with its immersive object based audio technology which removes the bounds of channels. The flexibility of objects allows for sound to be scaled large or small and moved around the room with greater accuracy than ever before leading to a richer immersive audio experience.

- **DTS Virtual:X (☞ p. 270)**
  DTS Virtual:X technology features DTS's proprietary virtual height and virtual surround processing to deliver an immersive sound experience from any type of input source (stereo to 7.1.4 channel) and speaker configuration.
  - DTS Virtual:X is not for use when Height speakers are connected.

High performance

- **4K 60Hz input/output supported**

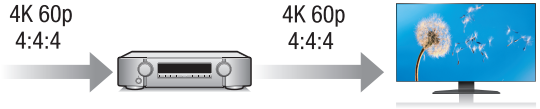

When 4K Ultra HD (High Definition) is used, an input/output speed of 60 frames per second (60p) is achieved for video signals. When connected to 4K Ultra HD and 60p video signal input compatible TV, you can enjoy the sense of realism only available from high-definition images, even when viewing fast-moving video.
This unit also supports image processing for 4K 60p, 4:4:4 and 24-bit videos. By processing the video at the original resolution, this unit lets you enjoy flawless, high-definition picture quality.
This unit also supports HDR (High Dynamic Range) and BT.2020 wide color gamut.

- **HDCP 2.3**
  This unit is compatible with HDCP 2.3 copyright protection standard.

- **Digital video processor upscales video signals (SD resolution) to HD (720p/1080p) and 4K** (☞ p. 253)

This unit is equipped with a 4K video upscaling function that allows SD (Standard Definition) video to be output via HDMI at 4K (3840 × 2160 pixels) resolution. This function enables the device to be connected to a TV using a single HDMI cable, and produces high definition images for any video source.

- **eARC (Enhanced Audio Return Channel) function compatibility**
  The eARC function is compatible with conventional ARC function-compatible audio formats in addition to multichannel linear PCM, Dolby TrueHD, Dolby Atmos, DTS-HD Master Audio, DTS:X and other audio formats a conventional ARC function cannot transmit.
  Additionally, connecting to an eARC function-compatible television enables enjoyment of higher-quality surround playback of the audio content played from your television.

- **HDMI connections enable connection to various digital AV devices (8 inputs, 1 output)**

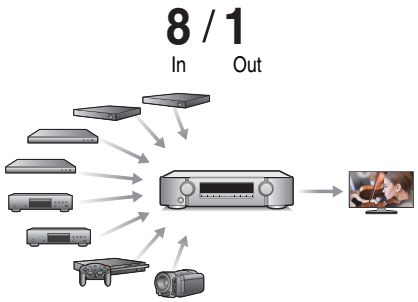

This unit is equipped with 8 HDMI inputs and 1 HDMI output enabling connection to various HDMI compatible devices such as Blu-ray Disc players, game consoles and HD video camcorders.

- **The device is equipped with a AirPlay® function in addition to network functions such as Internet radio etc. (☞ p. 107)**

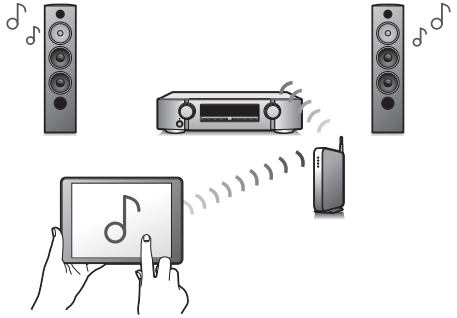

You can enjoy a wide variety of content, including listening to Internet Radio, playing audio files stored on your PC.
This unit also supports Apple AirPlay which lets you stream your music library from an iPhone®, iPad®, iPod touch® or iTunes®.

- **Supports AirPlay 2® wireless audio**
  Sync multiple AirPlay 2 compatible devices/speakers for simultaneous playback.
  This unit supports AirPlay 2 and requires iOS 11.4 or later.

- **Playback of DSD and FLAC files via USB and networks**
  This unit supports the playback of high resolution audio formats such as DSD (5.6 MHz) and FLAC 192 kHz files. It provides high quality playback of high resolution files.
- **Wireless connection with Bluetooth devices can be carried out easily (☞ p. 77)**

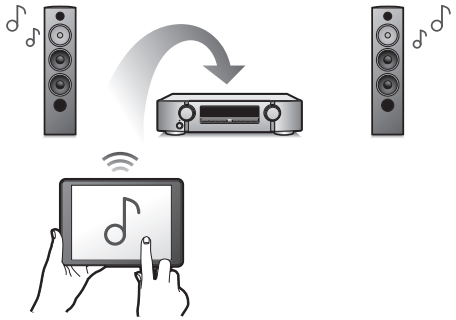

You can enjoy music simply by connecting wirelessly with your smartphone, tablet, PC, etc.

- **Multi-Room audio (☞ p. 118)**

【MAIN ZONE】 【ZONE2】

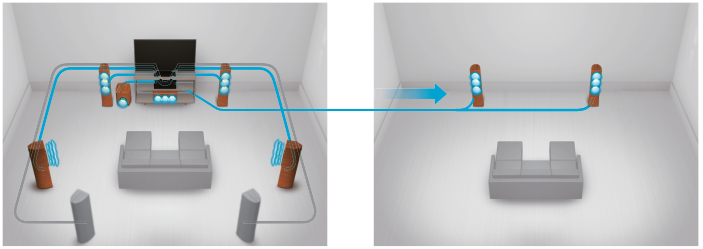

You can select and play back the respective inputs in MAIN ZONE and ZONE2.
In addition, when the All Zone Stereo function is used, the music being played back in MAIN ZONE can be enjoyed in all the zones at the same time. This is useful when you want to let the BGM propagate throughout the whole house.

- **Energy-saving design**
  This unit is equipped with an ECO Mode function that allows you to enjoy music and movies while reducing the power consumption during use, and also an auto-standby function that automatically turns off the power supply when the unit is not in use. This helps reduce unnecessary power use.

- **Compatible with the “Marantz 2016 AVR Remote” App* for performing basic operations of the unit with an iPad, iPhone or Android™ devices (Google, Amazon Kindle Fire)**

Along with many new features, the graphics and user interface have been completely overhauled. The new app gives you full control of this unit as well as access to its setup menu for detailed adjustments from your phones or tablets. “Marantz 2016 AVR Remote” App also gives you quick access to the receiver's status display, option menus, Marantz Blu-ray Disc player control, and online owner's manual for your convenience.

* Download the appropriate “Marantz 2016 AVR Remote” App for your iOS or Android devices. This unit needs to be connected to the same LAN or Wi-Fi (wireless LAN) network that the iPad, iPhone or Android™ is connected to.

- **HEOS provides streaming music from your favorite online music sources**

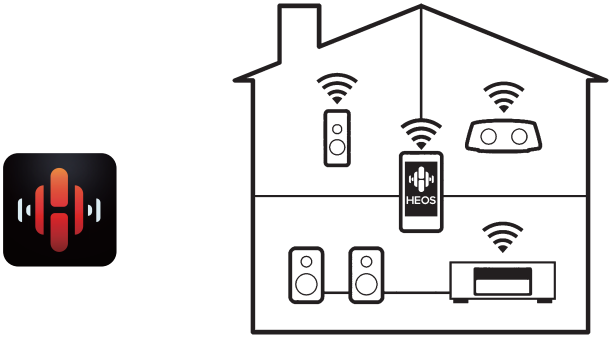

HEOS wireless multi-room sound system that enables you to enjoy your favorite music anywhere and everywhere around your home. By utilizing your existing home network and the HEOS App (available for iOS, Android and Amazon devices), you can explore, browse, and play music from your own music library or from many online streaming music services.

When multiple HEOS devices are connected to the same network, HEOS devices can be grouped to play back the same music on all devices simultaneously, or different music can be played on each separate HEOS device.

Easy operation

- **“Setup Assistant” provides easy-to-follow setup instructions**
  First select the language when prompted. Then simply follow the instructions displayed on the TV screen to set up the speakers, network, etc.
- **Easy to use Graphical User Interface**
  This unit is equipped with a Graphical User Interface for improved operability.

Part names and functions

Front panel

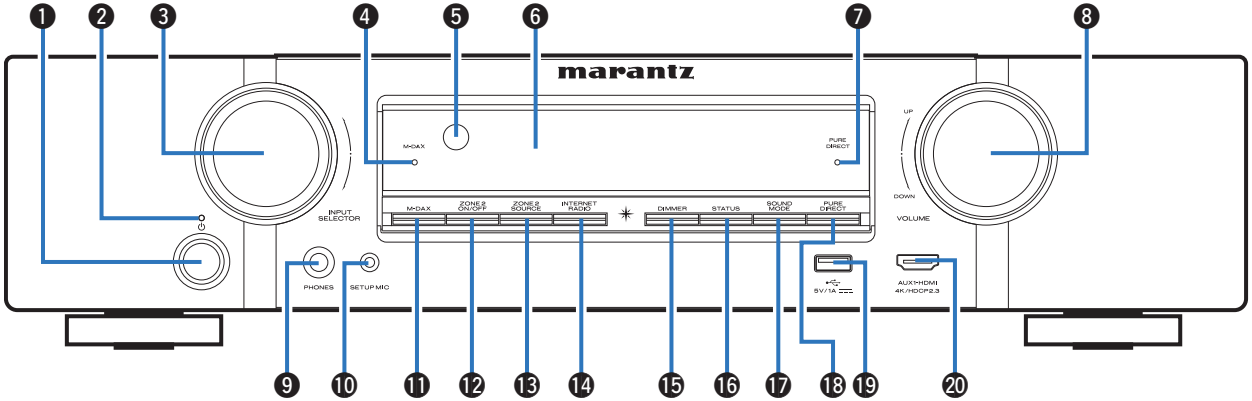

For details, see the next page.

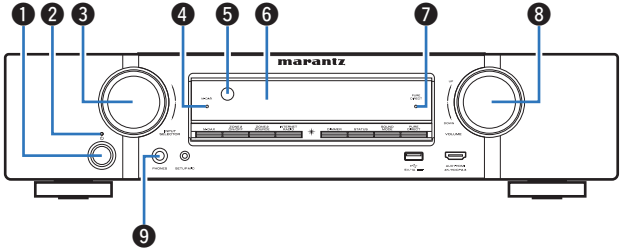

1 Power operation button (⏻)
Used to turn the power of the MAIN ZONE (room where this unit is located) on/off (standby). (☞ p. 71)

2 Power indicator
This is lit as follows according to the power status:
- Off: Power on
- Red: Normal standby
- Orange:
  - When “HDMI Pass Through” is set to “On” (☞ p. 166)
  - When “HDMI Control” is set to “On” (☞ p. 168)
  - When “Network Control” is set to “Always On” (☞ p. 207)

3 INPUT SELECTOR knob
This selects the input source. (☞ p. 71)

4 M-DAX indicator
This lights when the M-DAX mode is selected. (☞ p. 157)

5 Remote control sensor
This receives signals from the remote control unit. (☞ p. 10)

6 Display
This displays various pieces of information. (☞ p. 20)

7 PURE DIRECT indicator
This lights when the “Pure Direct” mode is selected as the sound mode. (☞ p. 121)

8 VOLUME knob
This adjusts the volume level. (☞ p. 72)

9 Headphones jack (PHONES)
This is used to connect headphones.
When the headphones are plugged into this jack, audio will no longer be output from the connected speakers or from the PRE OUT connectors.

NOTE
- To prevent hearing loss, do not raise the volume level excessively when using headphones.

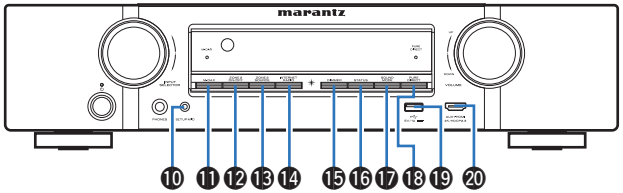

⑩ SETUP MIC jack

This is used to connect the supplied Sound calibration microphone. (☞ p. 184)

⑪ M-DAX button

This switches the M-DAX mode. (☞ p. 157)

⑫ ZONE2 ON/OFF button

This turns the power of ZONE2 (another room) on/off. (☞ p. 146)

⑬ ZONE2 SOURCE button

This selects the input source for ZONE2. (☞ p. 146)

⑭ INTERNET RADIO button

This switches the input source to “HEOS Music” – “TuneIn Internet Radio”. (☞ p. 92)

⑮ DIMMER button

Each press of this switches the brightness of the display. (☞ p. 216)

⑯ STATUS button

Each press of this switches the status information that is shown on the display.

⑰ SOUND MODE button

Switching the sound mode. (☞ p. 119)

⑱ PURE DIRECT button

This switches the sound mode between Direct, Pure Direct and Auto surround.

- “Direct playback” (☞ p. 121)
- “Pure Direct playback” (☞ p. 121)
- “Auto surround playback” (☞ p. 122)

⑲ USB port (⇠)

This is used to connect USB storages (such as USB memory devices). (☞ p. 62)

⑳ AUX1-HDMI connector

This is used to connect HDMI output compatible devices such as video camcorders and game consoles. (☞ p. 60)

Display

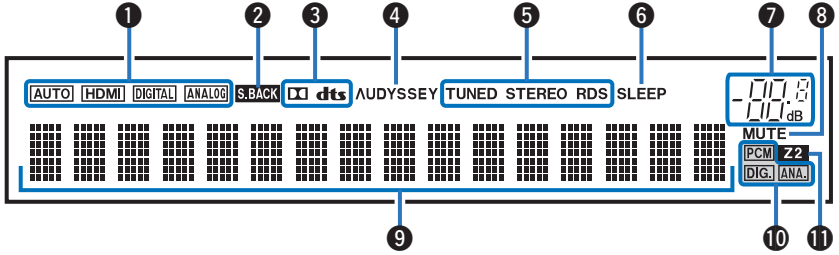

❶ Input mode indicators

These light according to the audio input mode settings of each input source. (☞ p. 179)

❷ Surround back indicator

This lights when audio signals are being output from the surround back speakers. (☞ p. 194)

❸ Decoder indicators

These light when Dolby or DTS signals are input or when the Dolby or DTS decoder is running.

❹ Audyssey® indicator

This lights when “MultEQ®”, “Dynamic EQ” or “Dynamic Volume” has been set up. (☞ p. 160)

❺ Tuner reception mode indicators

These light up according to the reception conditions when the input source is set to “Tuner”.

TUNED: Lights up when the broadcast is properly tuned in.

STEREO: Lights up when receiving FM stereo broadcasts.

RDS: Lights up when receiving RDS broadcasts.

❻ Sleep timer indicator

This lights when the sleep mode is selected. (☞ p. 134)

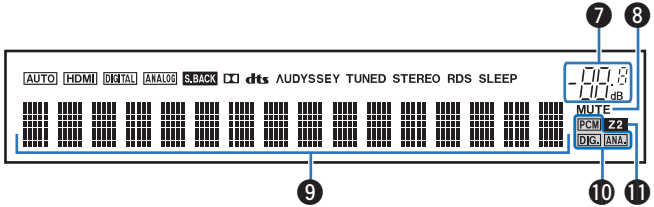

7 Volume indicator

8 MUTE indicator

This blinks while the sound is muted. (☞ p. 72)

9 Information display

The input source name, sound mode, setting values and other information are displayed here.

10 Input signal indicators

The respective indicator will light corresponding to the input signal. (☞ p. 179)

11 ZONE2 indicator

This lights up when ZONE2 (another room) power is turned on. (☞ p. 146)

Rear panel

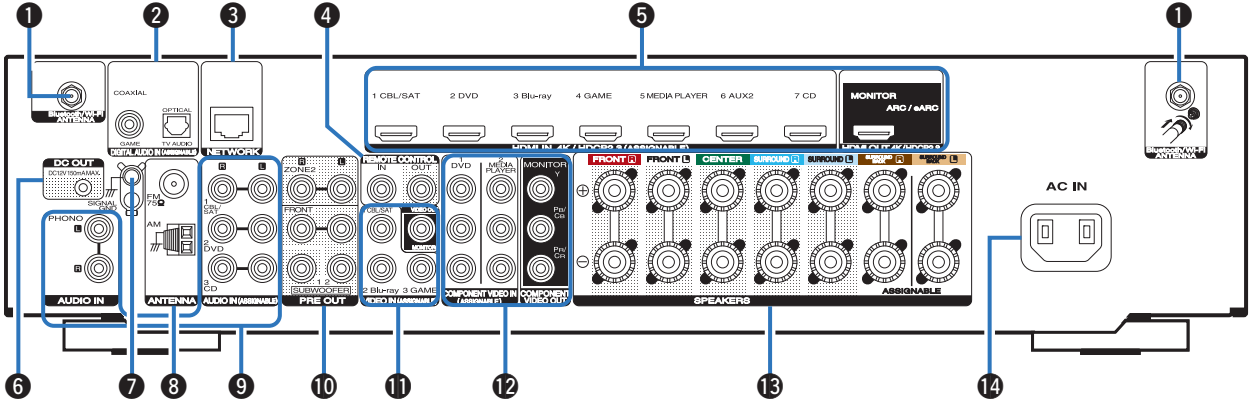

For details, see the next page.

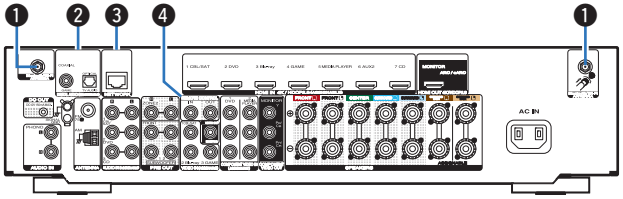

❶ Bluetooth/wireless LAN antenna connectors

Used to connect the included external antennas for Bluetooth/wireless connectivity when connecting to a network via wireless LAN, or when connecting to a handheld device via Bluetooth. (☞ p. 66)

① Place the external antennas for Bluetooth/wireless connectivity evenly over the screw terminal of rear.
② Turn clockwise until the antennas is fully connected.
③ Rotate the antenna upwards for best reception.

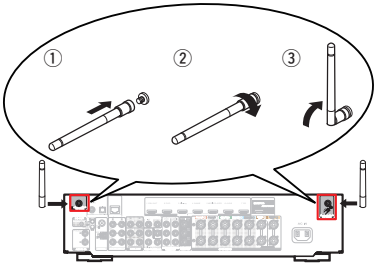

❷ Digital audio connectors (DIGITAL AUDIO)

Used to connect devices equipped with digital audio connectors.

- “Connection 2 : TV equipped with an HDMI connector and incompatible with the ARC (Audio Return Channel) / eARC (Enhanced Audio Return Channel)” (☞ p. 55)
- “Connection 3 : TV equipped without an HDMI connector” (☞ p. 56)
- “Connecting a set-top box (Satellite tuner/cable TV)” (☞ p. 58)

❸ NETWORK connector

Used to connect to a LAN cable when connecting to a wired LAN network. (☞ p. 65)

❹ REMOTE CONTROL jacks

Used to connect infrared receivers/transmitters in order to operate this unit and external devices from a different room. (☞ p. 67)

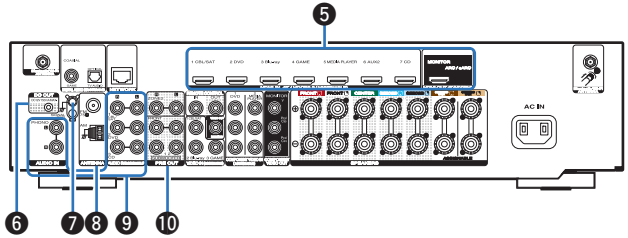

5 HDMI connectors

Used to connect devices equipped with HDMI connectors.

- “Connection 1 : TV equipped with an HDMI connector and compatible with the ARC (Audio Return Channel) / eARC (Enhanced Audio Return Channel)” (☞ p. 53)
- “Connection 2 : TV equipped with an HDMI connector and incompatible with the ARC (Audio Return Channel) / eARC (Enhanced Audio Return Channel)” (☞ p. 55)
- “Connecting a set-top box (Satellite tuner/cable TV)” (☞ p. 58)
- “Connecting a DVD player or Blu-ray Disc player” (☞ p. 59)

6 DC OUT jack

Used to connect devices equipped with the trigger function. (☞ p. 68)

7 SIGNAL GND terminal

Used to connect a ground wire for the turntable. (☞ p. 61)

8 FM/AM antenna terminals (ANTENNA)

Used to connect FM antennas and AM loop antennas. (☞ p. 63)

9 Analog audio connectors (AUDIO)

Used to connect devices equipped with analog audio connectors.

- “Connecting a set-top box (Satellite tuner/cable TV)” (☞ p. 58)
- “Connecting a DVD player or Blu-ray Disc player” (☞ p. 59)
- “Connecting a turntable” (☞ p. 61)

10 PRE OUT connectors

Used to connect a subwoofer with built-in amplifier or a power amplifier for ZONE2.

- “Connecting the subwoofer” (☞ p. 38)
- “Connection 2 : Connection using an external amplifier (ZONE2)” (☞ p. 145)

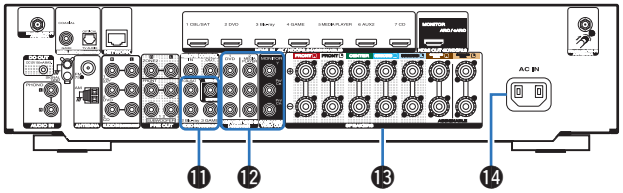

⓫ Video connectors (VIDEO)

Used to connect devices equipped with video connectors.

- “Connection 3 : TV equipped without an HDMI connector” (☞ p. 56)
- “Connecting a set-top box (Satellite tuner/cable TV)” (☞ p. 58)
- “Connecting a DVD player or Blu-ray Disc player” (☞ p. 59)

⓬ Component video connectors (COMPONENT VIDEO)

Used to connect devices equipped with component video connectors.

- “Connection 3 : TV equipped without an HDMI connector” (☞ p. 56)
- “Connecting a set-top box (Satellite tuner/cable TV)” (☞ p. 58)
- “Connecting a DVD player or Blu-ray Disc player” (☞ p. 59)

⓭ Speaker terminals (SPEAKERS)

Used to connect speakers. (☞ p. 37)

⓮ AC inlet (AC IN)

Used to connect the power cord. (☞ p. 69)

NOTE

- Do not touch the inner pins of the connectors on the rear panel. Electrostatic discharge may cause permanent damage to the unit.

Remote control unit

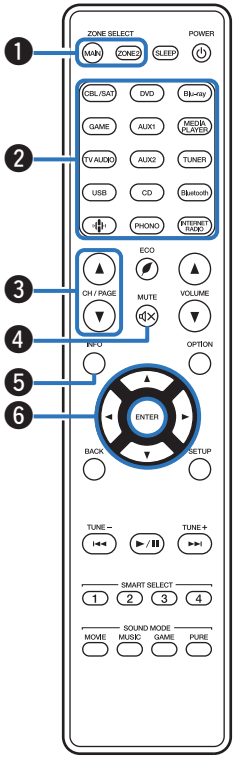

1 ZONE SELECT buttons

These switch the zone (MAIN ZONE, ZONE2) that is operated through the remote control unit.

- “Playback in ZONE2” (☞ p. 146)
- “Menu operations” (☞ p. 152)

2 Input source select buttons

These selects the input source.

- “Selecting the input source” (☞ p. 71)
- “Playback in ZONE2” (☞ p. 146)

3 Channel/page search buttons (CH/PAGE ▲▼)

These select radio stations registered to presets or switch pages. (☞ p. 88)

4 MUTE button (🔇)

This mutes the output audio.

- “Turning off the sound temporarily (Muting)” (☞ p. 72)
- “Turning off the sound temporarily (Muting) (ZONE2)” (☞ p. 147)

5 Information button (INFO)

This displays the status information on the TV screen. (☞ p. 221)

6 Cursor buttons (△▽◁ ▷)

These select items.

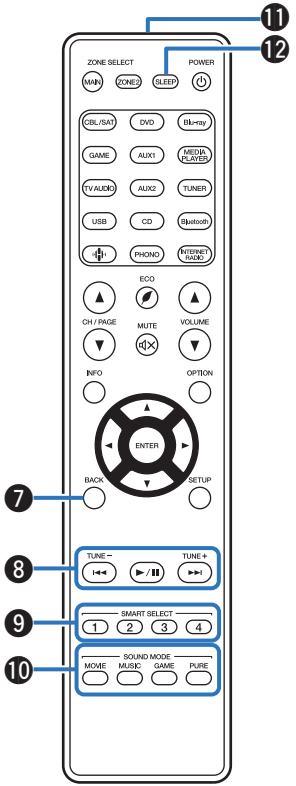

7 BACK button

This returns to the previous screen.

8 System buttons

These perform playback related operations.

Tuning up / Tuning down buttons (TUNE +, –)

These select either FM broadcast or AM broadcast. (☞ p. 82)

9 SMART SELECT buttons (1 – 4)

These call up settings registered to each button, such as input source, volume level and sound mode settings. (☞ p. 136)

10 SOUND MODE buttons

These select the sound mode. (☞ p. 119)

11 Remote control signal transmitter

This transmits signals from the remote control unit. (☞ p. 10)

12 SLEEP button

This sets the sleep timer. (☞ p. 134)

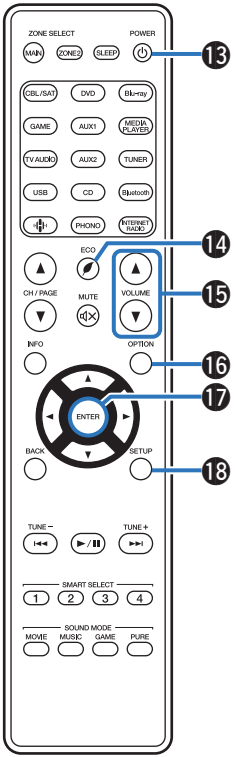

⓭ POWER button (⏻)

This turns the power on/off.

- “Turning the power on” (☞ p. 71)
- “Playback in ZONE2” (☞ p. 146)

⓮ ECO Mode button (🍃)

This switches to ECO Mode. (☞ p. 210)

⓯ VOLUME buttons (▲▼)

These adjusts the volume level.

- “Adjusting the volume” (☞ p. 72)
- “Adjusting the volume (ZONE2)” (☞ p. 147)

⓰ OPTION button

This displays the option menu on the TV screen.

⓱ ENTER button

This determines the selection.

⓲ SETUP button

This displays the menu on the TV screen. (☞ p. 152)

Contents

Speaker installation	30
Connecting speakers	37
Connecting a TV	52
Connecting a playback device	57
Connecting a USB memory device to the USB port	62
Connecting FM/AM antennas	63
Connecting to a home network (LAN)	65
Connecting an external control device	67
Connecting the power cord	69

NOTE

- Do not plug in the power cord until all connections have been completed. However, when the “Setup Assistant” is running, follow the instructions in the “Setup Assistant” (page 9 in the separate “Quick Start Guide”) screen for making connections. (During “Setup Assistant” operation, the input/output connectors do not conduct current.)
- Do not bundle power cords together with connection cables. Doing so can result in noise.

Cables used for connections

Provide necessary cables according to the devices you want to connect.

Speaker cable	
Subwoofer cable	
HDMI cable	
Component video cable	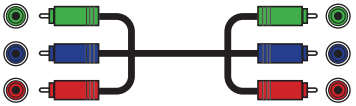
Video cable	
Coaxial digital cable	
Optical cable	
Audio cable	
LAN cable	

Speaker installation

Determine the speaker system depending on the number of speakers you are using and install each speaker and subwoofer in the room. Speaker installation is explained using this example of a typical installation.

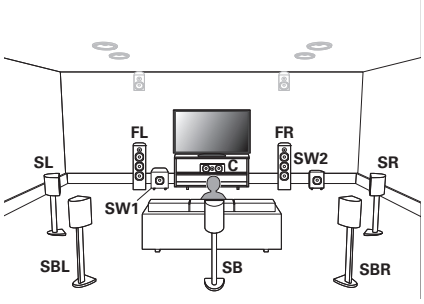

FL/FR (Front speaker left/ right)**:**	Place the FRONT left and right speakers an equal distance from the main listening position. The distance between each speaker and your TV should also be the same.
C (Center speaker)**:**	Place the CENTER speaker in between the front speakers and above or below your TV.
SL/SR (Surround speaker left/ right)**:**	Place the SURROUND left and right speakers an equal distance to the left and right sides of the main listening position. If you don't have surround back speakers, move the surround speakers slightly behind your listening position.
SBL/SBR (Surround back speaker left/right)**:**	Place the SURROUND BACK left and right speakers an equal distance from the main listening position and directly behind the main listening position. When using a single surround back speaker (SB), place it directly behind the listening position.
SW 1/2 (Subwoofer)**:**	Place the SUBWOOFER at a convenient location near the front speakers. If you have two subwoofers, place them asymmetrically across the front of your room.

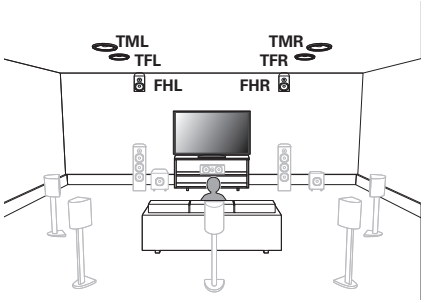

FHL/FHR (Front height speaker left/right)**:**	Place the FRONT HEIGHT left and right speakers directly above the front speakers. Mount them as close to the ceiling as possible and aim them towards the main listening position.
TFL/TFR (Top front speaker left/right)**:**	Mount the TOP FRONT left and right speakers on the ceiling slightly in front of your main listening position and aligned with the left and right front speakers.
TML/TMR (Top middle speaker left/right)**:**	Mount the TOP MIDDLE left and right speakers directly above the main listening position and aligned with the left and right front speakers.

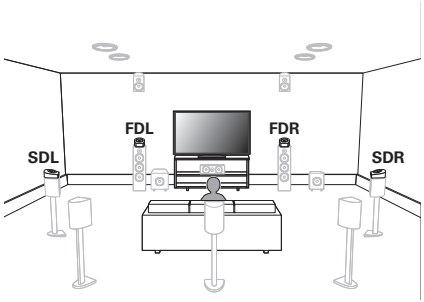

FDL/FDR (Front Dolby speaker left/right)**:**	Place the FRONT Dolby Atmos Enabled speaker on the front speaker. For a Dolby Atmos Enabled integrated with a front speaker, place the Dolby Atmos Enabled speaker instead of the front speaker.
SDL/SDR (Surround Dolby speaker left/right)**:**	Place the SURROUND Dolby Atmos Enabled speaker on the surround speaker. For a Dolby Atmos Enabled speaker integrated with a surround speaker, place the Dolby Atmos Enabled speaker instead of the surround speaker.

About Dolby Atmos Enabled speakers

Dolby Atmos Enabled speakers reflect the sound off the ceiling to allow the sound to come from over your head by using a special upward-pointing speaker that is placed on the floor.

You can enjoy the Dolby Atmos 3D sound even in an environment where speakers cannot be installed on the ceiling.

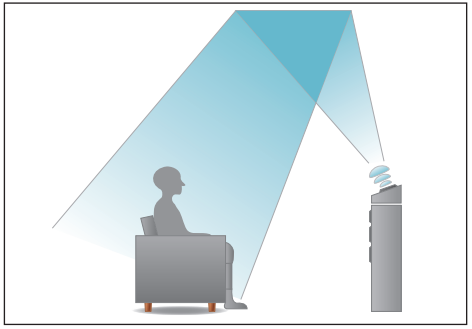

- This unit is compatible with Dolby Atmos and DTS:X which offers an even wider and deeper surround sensation.
- The “Speaker Virtualizer” must be set to “On” (☞ p. 156) for Dolby Atmos playback with 5.1-channel speaker configurations or less.
- DTS:X can be selected regardless of the speaker configuration.
- Use the illustration below as a guide for how high each speaker should be installed. The height does not need to be exactly the same.

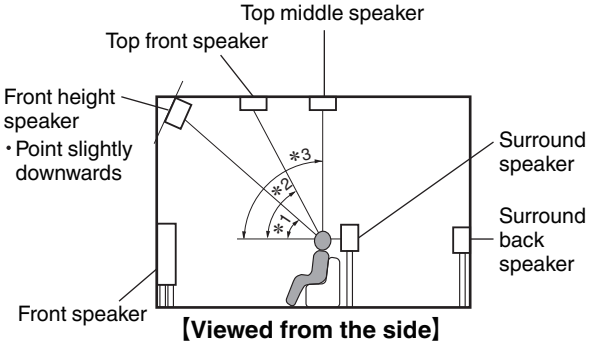

【Viewed from the side】

∗1: 30° – 45°　∗2: 30° – 55°　∗3: 65° – 100°

Height speakers layout

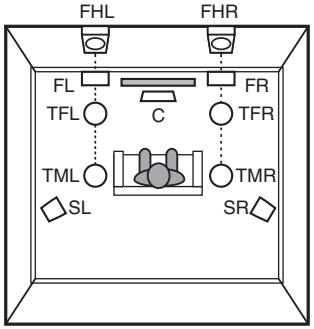

【Viewed from the top】

■ When 7.1-channel speakers are installed using surround back speakers

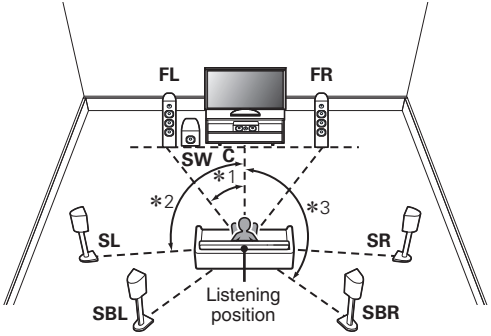

∗1 22° - 30° ∗2 90° - 110° ∗3 135° - 150°

- When using a single surround back speaker, place it directly behind the listening position.

■ When 5.1-channel speakers are installed

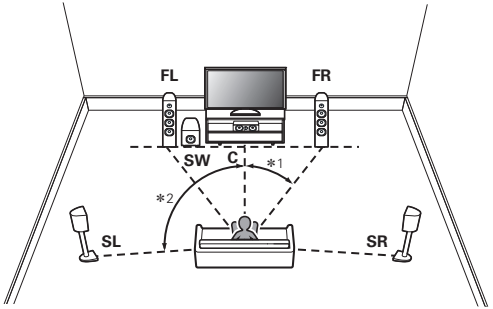

∗1 22° - 30° ∗2 120°

■ Layout including height speakers and ceiling speakers

❑ Height speaker layout example

Combination of 5.1-channel layout and front height speakers.

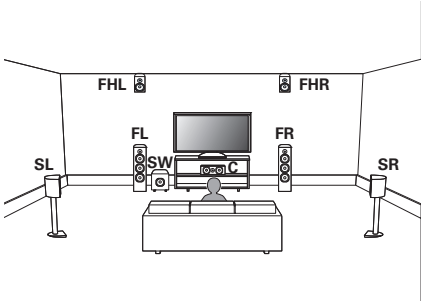

❑ Ceiling speaker layout example

Combination of 5.1-channel layout and top middle speakers.

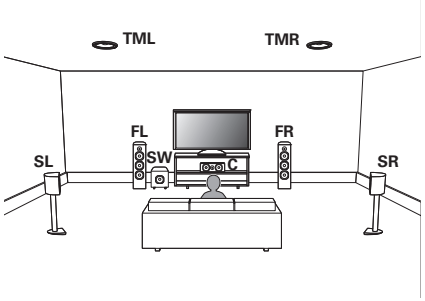

❑ Dolby Atmos Enabled speaker layout example

Combination of 5.1-channel layout and front Dolby speakers.

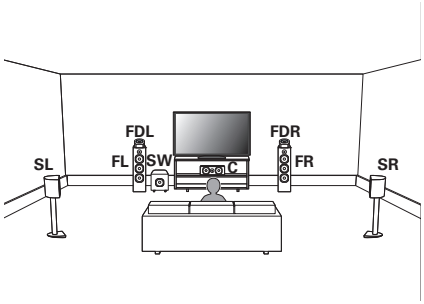

Connecting speakers

Here we connect the speakers in the room to this unit.

Before connecting speakers

NOTE

- Disconnect this unit's power plug from the power outlet before connecting the speakers. Also, turn off the subwoofer.
- Connect so that the speaker cable core wires do not protrude from the speaker terminal. The protection circuit may be activated if the core wires touch the rear panel or if the + and - sides touch each other. ("Protection circuit" (☞ p. 274))
- Never touch the speaker terminals while the power cord is connected. Doing so could result in electric shock. When the "Setup Assistant" (page 9 in the separate "Quick Start Guide") is running, follow the instructions in the "Setup Assistant" screen for making connections. (Power is not supplied to the speaker terminals while the "Setup Assistant" is running.)
- Use speakers with an impedance of 4 – 16 Ω/ohms.

NOTE

- Carry out the following settings when using a speaker with an impedance of 4 – 6 Ω/ohms.

1. Press and hold the main unit's ZONE2 SOURCE and STATUS at the same time for at least 3 seconds.
   "V.Format:< PAL>" appears on the display.
2. Press DIMMER on the main unit three times.
   "Sp.Imp.:<8ohms>" appears on the display.
3. Press ZONE2 SOURCE or INTERNET RADIO on the main unit to select the impedance.

8ohms (Default)**:**	Select when the impedance for all of the connected speakers is 8 Ω/ohms or over.
6ohms:	Select when the impedance for any of the connected speakers is 6 Ω/ohms.
4ohms:	Select when the impedance for any of the connected speakers is 4 Ω/ohms.

4. Press the main unit's STATUS to complete the setting.

■ Connecting the speaker cables

Carefully check the left (L) and right (R) channels and + (red) and – (black) polarities on the speakers being connected to this unit, and be sure to connect the channels and polarities correctly.

1 **Peel off about 10 mm of sheathing from the tip of the speaker cable, then either twist the core wire tightly or terminate it.**

2 **Turn the speaker terminal counterclockwise to loosen it.**

3 **Insert the speaker cable's core wire to the hilt into the speaker terminal.**

4 **Turn the speaker terminal clockwise to tighten it.**

■ Connecting the subwoofer

Use a subwoofer cable to connect the subwoofer. Two subwoofers can be connected to this unit.

The same signal is output from the respective subwoofer terminals.

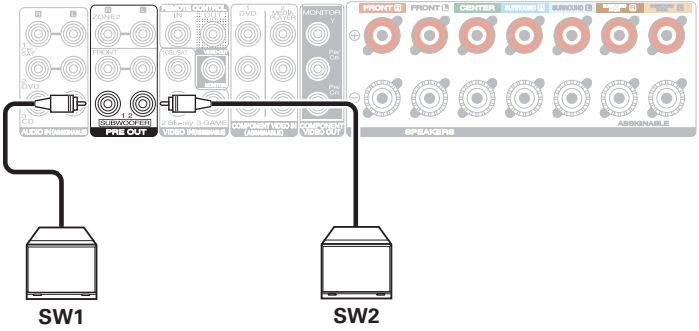

About the cable labels (supplied) for channel identification

The channel display section for speaker terminals on the rear panel is color-coded for each channel to be identifiable.

Attach the cable label corresponding to each speaker to each speaker cable.
This makes it easy to connect the correct cable to the speaker terminals on the rear panel.

Speaker	Color
FRONT L	White
FRONT R	Red
CENTER	Green
SURROUND L	Light Blue
SURROUND R	Blue
SURROUND BACK L	Beige
SURROUND BACK R	Brown
FRONT HEIGHT L	Beige
FRONT HEIGHT R	Brown
ZONE2 L	Beige
ZONE2 R	Brown
TOP FRONT L	Beige
TOP FRONT R	Brown
TOP MIDDLE L	Beige
TOP MIDDLE R	Brown
FRONT DOLBY L	Beige
FRONT DOLBY R	Brown
SURROUND DOLBY L	Beige
SURROUND DOLBY R	Brown
SUBWOOFER 1	Black
SUBWOOFER 2	Black

Attach the cable label for each channel to its speaker cable as shown in the diagram.

Refer to the table and attach the label to each speaker cable.

Then, make connection so that the color of the speaker terminal matches that of the cable label.

【 How to attach the cable labels 】

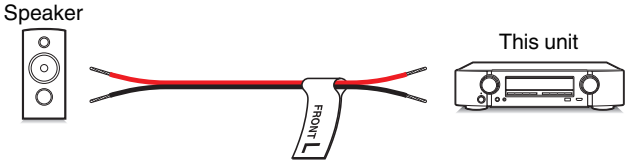

Speaker configuration and “Amp Assign” settings

This unit has a built-in 7-channel power amplifier. In addition to the basic 5.1-channel system, a variety of speaker systems can be configured by changing the “Amp Assign” settings to suit the application, such as 7.1-channel systems, bi-amp connections and 2-channel systems for multi-zone playback. (☞ p. 191)

Perform “Amp Assign” settings to suit the number of rooms and speaker configuration to be installed. (☞ p. 191)

Playback speaker and zone		“Amp Assign” settings	Connection page
MAIN ZONE	ZONE2		
5.1-channel	2-channel (Pre-out)	Can be set in all “Amp Assign” modes.	42
7.1-channel (surround back)	2-channel (Pre-out)	Surround Back (Default)	43
7.1-channel (front height)	2-channel (Pre-out)	Front Height	44
7.1-channel (top front)	2-channel (Pre-out)	Top Front	45
7.1-channel (top middle)	2-channel (Pre-out)	Top Middle	46
7.1-channel (front Dolby Atmos Enabled speaker)	2-channel (Pre-out)	Front Dolby	47
7.1-channel (surround Dolby Atmos Enabled speaker)	2-channel (Pre-out)	Surround Dolby	48
5.1-channel (bi-amp connection for front speaker)	2-channel (Pre-out)	Bi-Amp	49
5.1-channel + second pair of front speaker	2-channel (Pre-out)	Front B	50
5.1-channel	2-channel (Speaker out)	ZONE2	51

- The sound mode that can be selected varies according to the speaker configuration. See “Sound modes and channel output” (☞ p. 258) for the sound modes that are supported.

Connecting 5.1-channel speakers

This serves as a basic 5.1-channel surround system.

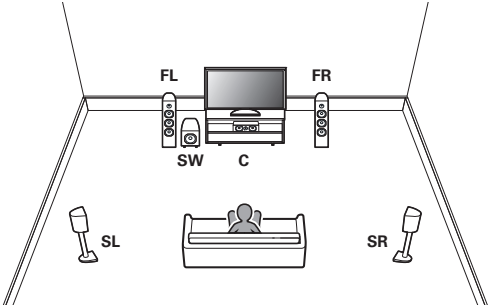

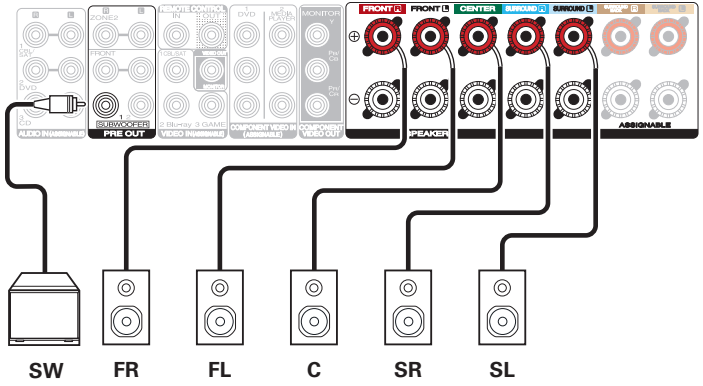

Connecting 7.1-channel speakers

System for 7.1-channel surround playback.

■ Example connections when using surround back speakers

This 7.1-channel surround system is the same as a basic 5.1-channel system but with surround back speakers.

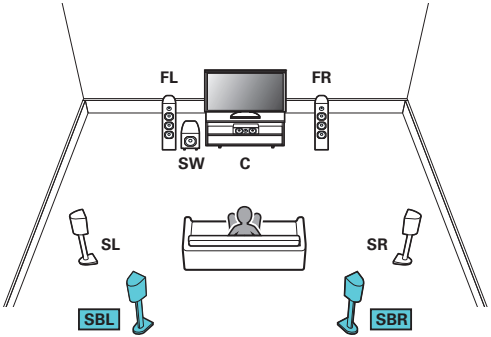

- Set “Assign Mode” to “Surround Back” in the menu. (☞ p. 191)

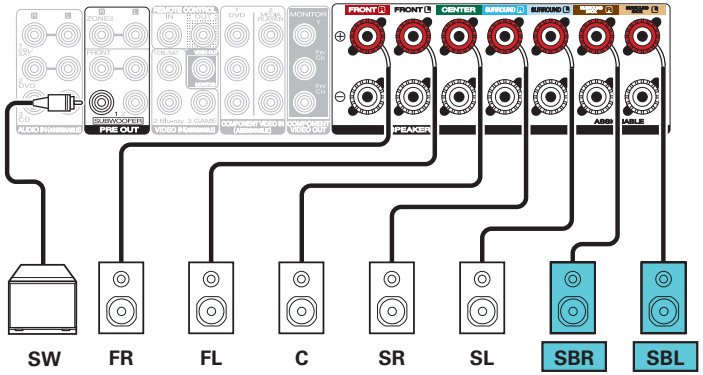

- When using a single surround back speaker, connect it to the SURROUND BACK L terminal.

■ Example connections when using front height speakers

This 7.1-channel surround system is the same as a basic 5.1-channel system but with front height speakers.

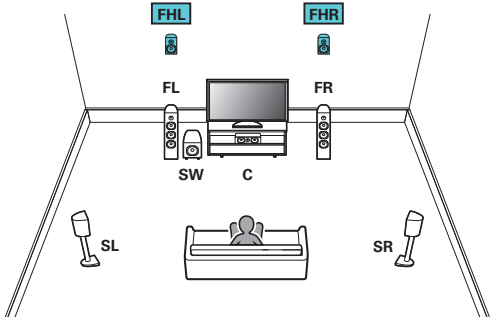

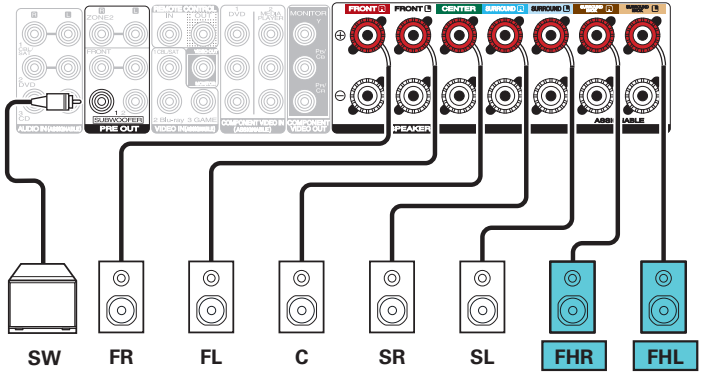

- Set “Assign Mode” to “Front Height” in the menu. (☞ p. 191)

■ Example connections when using top front speakers

This 7.1-channel surround system is the same as a basic 5.1-channel system but with top front speakers.

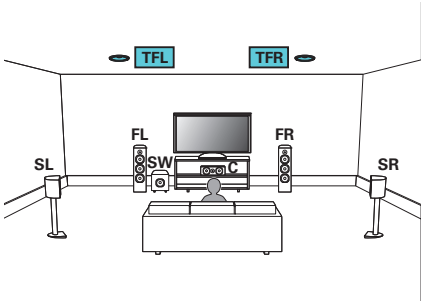

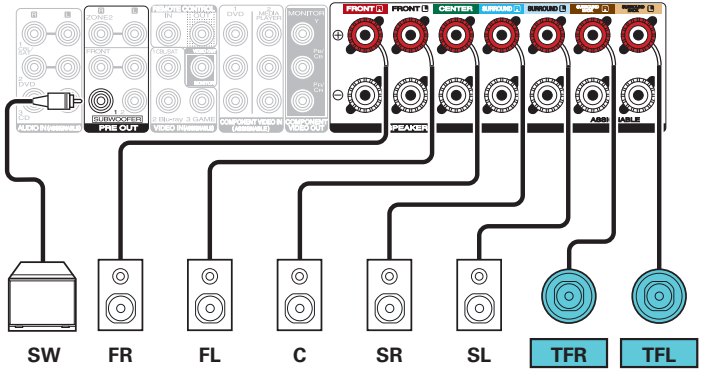

- Set “Assign Mode” to “Top Front” in the menu. (☞ p. 191)

■ Example connections when using top middle speakers

This 7.1-channel surround system is the same as a basic 5.1-channel system but with top middle speakers.

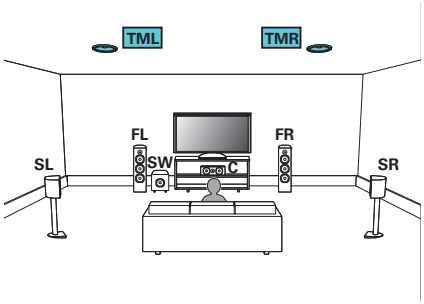

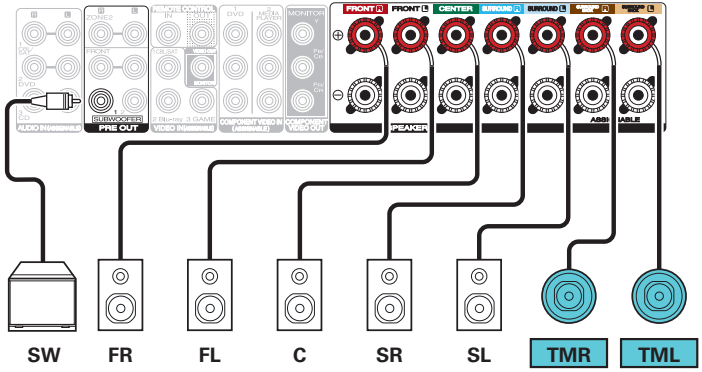

- Set “Assign Mode” to “Top Middle” in the menu. (☞ p. 191)

■ Example connections when using front Dolby Atmos Enabled speakers

This 7.1-channel surround system is the same as a basic 5.1-channel system but with front Dolby Atmos Enabled speakers.

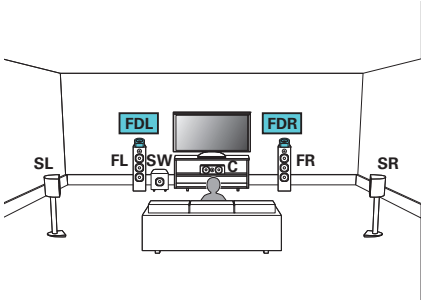

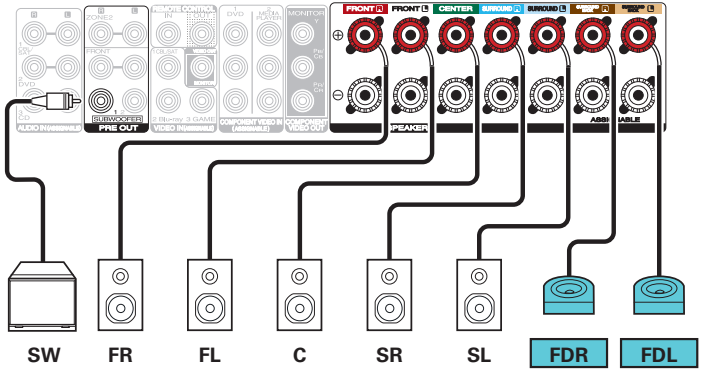

- Set “Assign Mode” to “Front Dolby” in the menu. (☞ p. 191)

■ Example connections when using surround Dolby Atmos Enabled speakers

This 7.1-channel surround system is the same as a basic 5.1-channel system but with surround Dolby Atmos Enabled speakers.

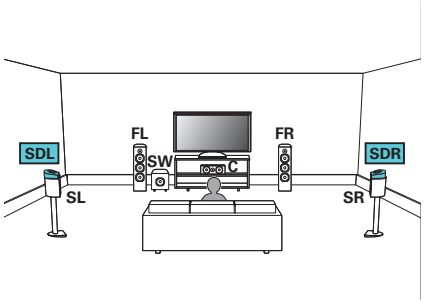

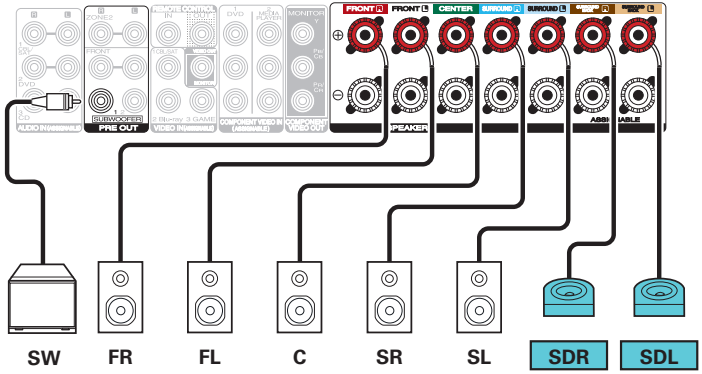

- Set “Assign Mode” to “Surround Dolby” in the menu. (☞ p. 191)

Connecting 5.1-channel speakers: Bi-amp connection of front speaker

This system plays back 5.1-channels. You can use the bi-amp connection for front speakers. Bi-amp connection is a method to connect separate amplifiers to the tweeter terminal and woofer terminal of a speaker that supports bi-amplification. This connection enables back EMF (power returned without being output) from the woofer to flow into the tweeter without affecting the sound quality, producing a higher sound quality.

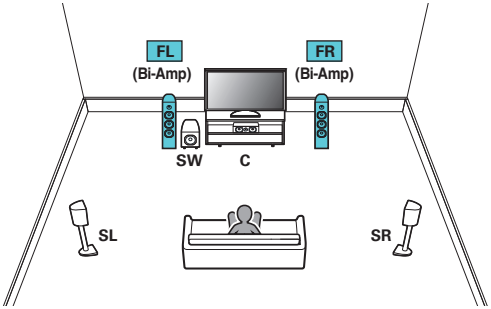

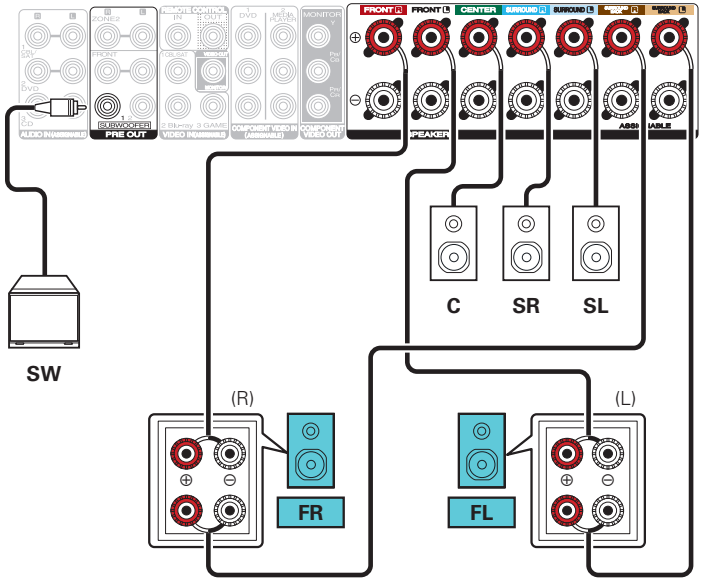

- Set “Assign Mode” to “Bi-Amp” in the menu. (☞ p. 192)

NOTE

- When making bi-amp connections, be sure to remove the short-circuiting plate or wire between the speaker’s woofer and tweeter terminals.

Connecting 5.1-channel speakers: Second pair of front speaker

This system enables switching playback between front speakers A and B as desired.

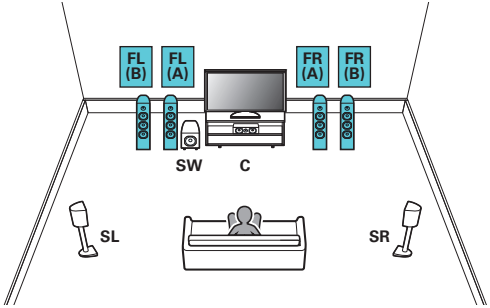

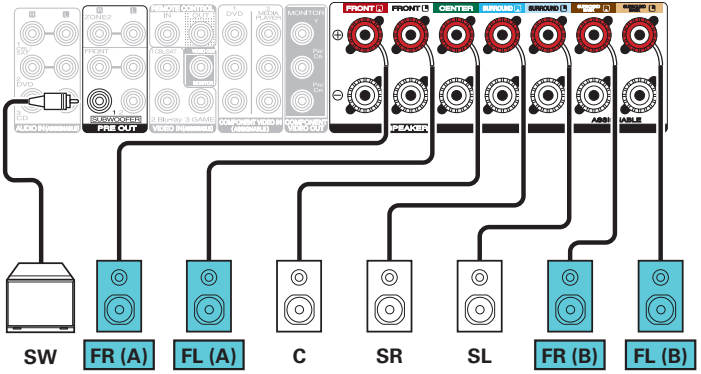

- Set “Assign Mode” to “Front B” in the menu. (☞ p. 192)

Connecting multi-zone speakers

■ 5.1-channel (MAIN ZONE) + 2-channel (ZONE2) speaker connection

This connection method constructs a 5.1-channel speaker system in the MAIN ZONE and a 2-channel system in ZONE2.

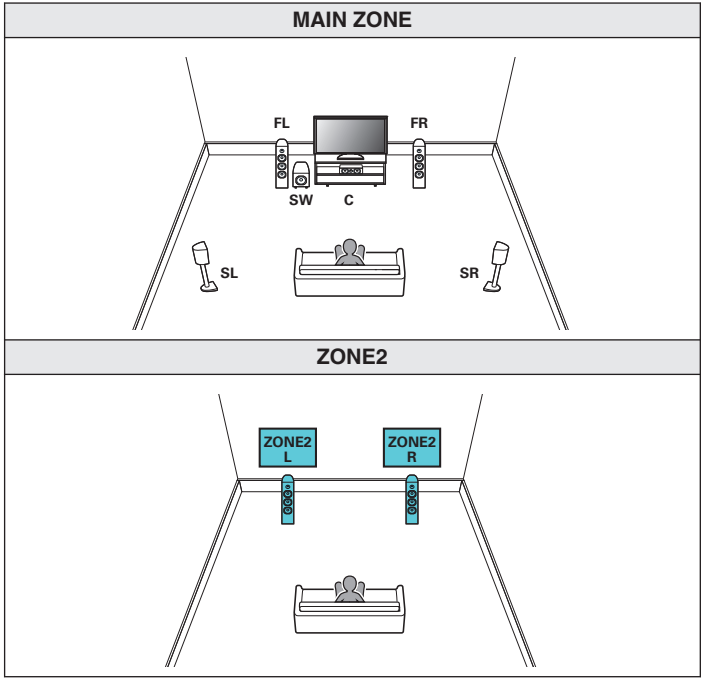

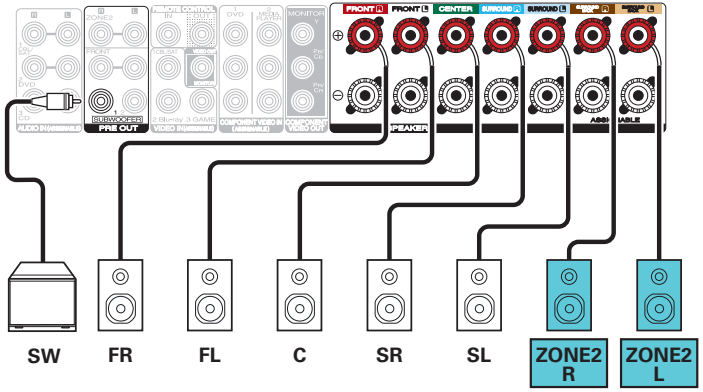

- Set “Assign Mode” to “ZONE2” in the menu. (☞ p. 192)

Connecting a TV

Connect a TV to this unit so that the input video is output to the TV. You can also enjoy audio from the TV on this unit.

How to connect a TV depends on the connectors and functions equipped on the TV.

ARC (Audio Return Channel) / eARC (Enhanced Audio Return Channel) function plays TV audio on this unit by sending the TV audio signal to this unit via HDMI cable.

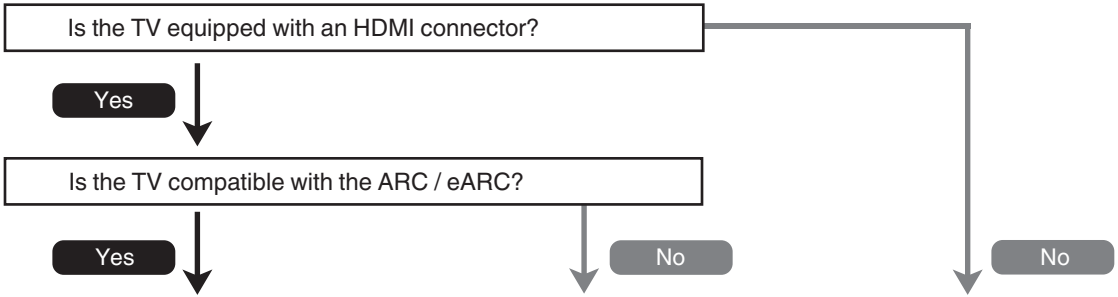

“Connection 1 : TV equipped with an HDMI connector and compatible with the ARC (Audio Return Channel) / eARC (Enhanced Audio Return Channel)” (☞ p. 53)

“Connection 2 : TV equipped with an HDMI connector and incompatible with the ARC (Audio Return Channel) / eARC (Enhanced Audio Return Channel)” (☞ p. 55)

“Connection 3 : TV equipped without an HDMI connector” (☞ p. 56)

Connection 1 : TV equipped with an HDMI connector and compatible with the ARC (Audio Return Channel) / eARC (Enhanced Audio Return Channel)

Use an HDMI cable to connect a TV that is compatible with the ARC / eARC function to this unit.

Set “HDMI Control” to “On” or “ARC” to “On” when using a TV that supports the ARC function. (☞ p. 168)

Using an eARC function-compatible television enables audio playback from the speaker connected to this unit, regardless of “HDMI Control” and “ARC” settings in the menu.

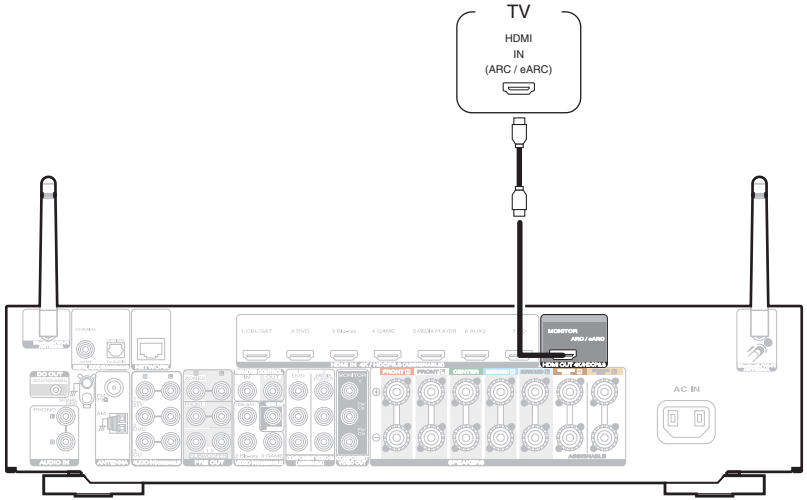

- eARC function settings may be required depending on the eARC function-compatible television you are using. Make sure eARC is set to on if this setting exists on your television. For more information, check your television's owner's manual.
- When an ARC and an eARC function-compatible televisions are connected, the eARC function-compatible television is prioritized.
- Use a "High Speed HDMI Cable with Ethernet" when using an ARC / eARC function-compatible television.

Connection 2 : TV equipped with an HDMI connector and incompatible with the ARC (Audio Return Channel) / eARC (Enhanced Audio Return Channel)

Use an HDMI cable to connect the TV to this unit.
To listen to audio from TV on this unit, use an optical cable to connect the TV to this unit.

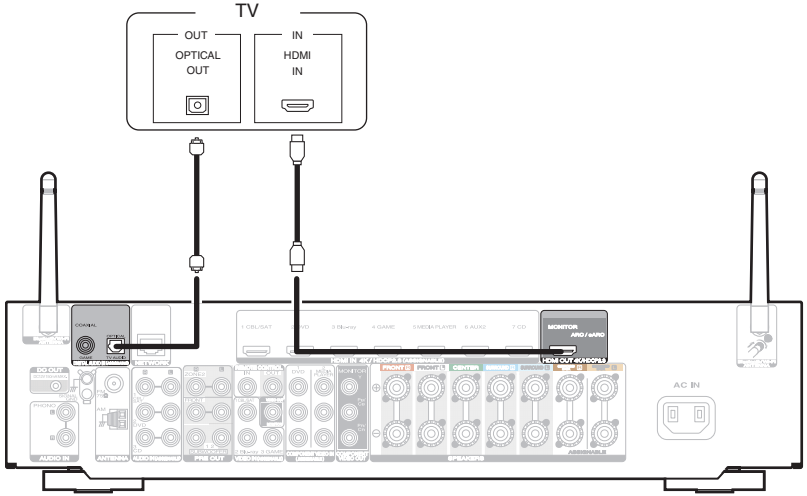

Connection 3 : TV equipped without an HDMI connector

Use a component video or a video cable to connect the TV to this unit.
To listen to audio from TV on this unit, use an optical cable to connect the TV to this unit.

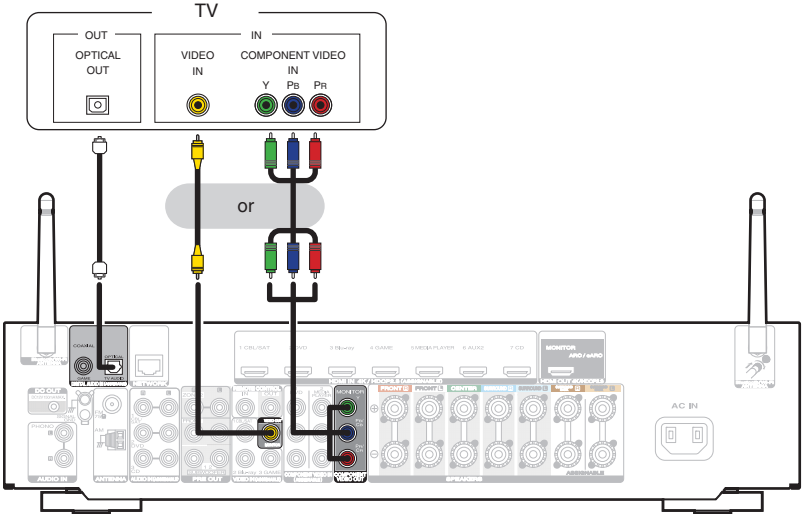

Connecting a playback device

This unit is equipped with three types of video input connectors (HDMI, component video and composite video) and three types of audio input connectors (HDMI, digital audio and audio).

Select input connectors on this unit according to the connectors equipped on the device you want to connect.

If the device connected to this unit is equipped with an HDMI connector, it is recommended to use HDMI connections.

In the HDMI connection, audio and video signals can be transmitted through a single HDMI cable.

- “Connecting a set-top box (Satellite tuner/cable TV)” (☞ p. 58)
- “Connecting a DVD player or Blu-ray Disc player” (☞ p. 59)
- “Connecting a video camcorder or game console” (☞ p. 60)
- “Connecting a turntable” (☞ p. 61)

- Connect devices to this unit as indicated by the input sources printed on the audio/video input connectors of this unit.
- The source that is assigned to the HDMI IN, DIGITAL AUDIO IN, COMPONENT VIDEO IN, VIDEO IN and AUDIO IN connectors can be changed. See “Input Assign” on how to change the input source assigned to the input connectors. (☞ p. 177)
- To play back audio signals that are input to this unit on a TV connected via HDMI, set in the menu “HDMI Audio Out” to “TV”. (☞ p. 166)
- To enjoy content that is copyright protected by HDCP 2.2 or HDCP 2.3, use a playback device and TV compatible with HDCP 2.2 or HDCP 2.3.

Connecting a set-top box (Satellite tuner/cable TV)

This explanation uses the connection with a satellite tuner/cable TV STB as an example.
Select the input connectors on this unit to match the connectors on the device that you want to connect to.

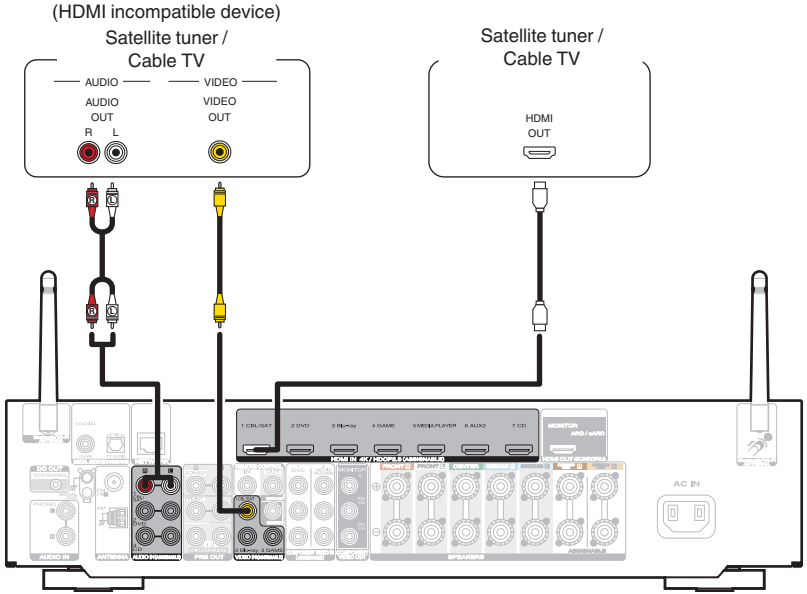

Connecting a DVD player or Blu-ray Disc player

This explanation uses the connection with a DVD player or Blu-ray Disc player as an example.
Select the input connectors on this unit to match the connectors on the device that you want to connect to.

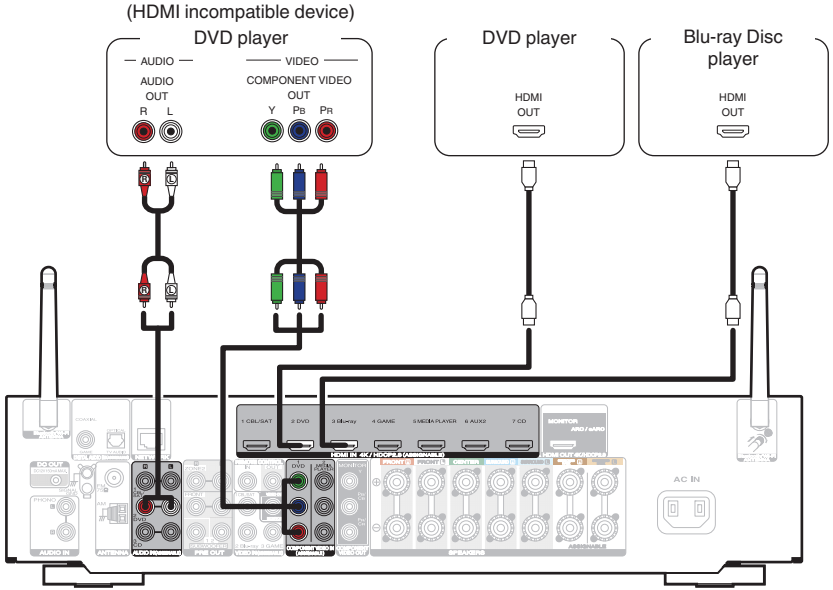

Connecting a video camcorder or game console

This explanation uses the connection with a video camcorders as an example.
Connect a playback device to this unit, such as a video camcorder or game console.

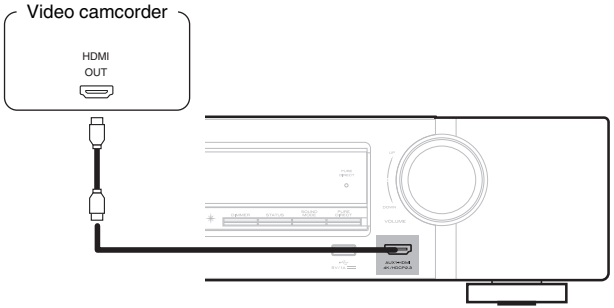

Connecting a turntable

This unit is compatible with turntables equipped with a moving magnet (MM) phono cartridge. When you connect to a turntable with a low output moving coil (MC) cartridge, use a commercially available MC head amp or a step-up transformer.

If you set this unit's input source to "Phono" and you accidentally increase the volume without having a turntable connected, you may hear a hum noise from the speakers.

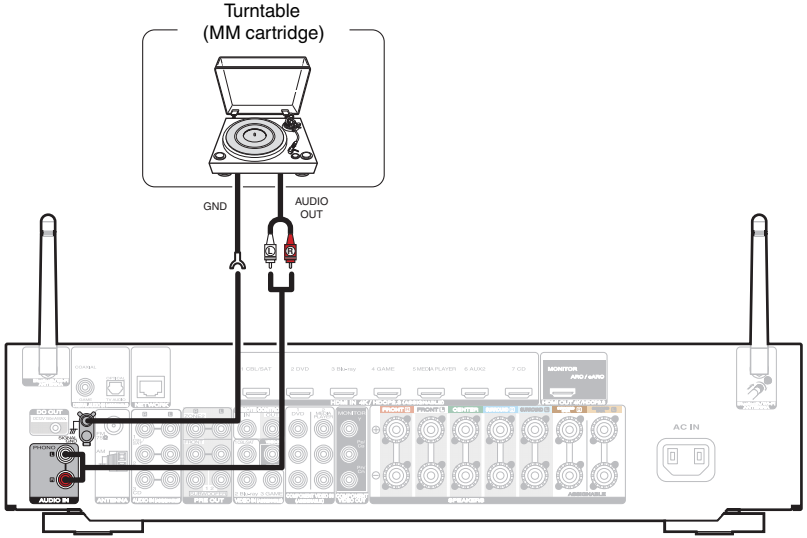

NOTE

- The earth terminal (SIGNAL GND) of this unit is not for safety grounding purposes. If this terminal is connected when there is a lot of noise, the noise can be reduced. Note that depending on the turntable, connecting the ground line may have the reverse effect of increasing noise. In this case, it is not necessary to connect the ground line.

Connecting a USB memory device to the USB port

For operating instructions see “Playing a USB memory device” (☞ p. 73).

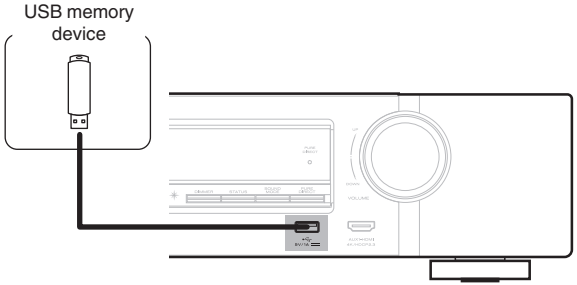

- Marantz does not guarantee that all USB memory devices will operate or receive power. When using a portable USB hard disk drive (HDD) which came with an AC adapter, use that device’s supplied AC adapter.

NOTE

- USB memory devices will not work via a USB hub.
- It is not possible to use this unit by connecting the unit’s USB port to a PC via a USB cable.
- Do not use an extension cable when connecting a USB memory device. This may cause radio interference with other devices.

Connecting FM/AM antennas

Connect the antenna, tune in to a broadcast and then move the antenna to the location where there is least noise. Then use tape, etc. to fix the antenna in this location. (“Listening to FM/AM broadcasts” (☞ p. 81))

- If you are unable to receive a good broadcast signal, we recommend installing an outdoor antenna. For details, inquire at the retail store where you purchased the unit.

NOTE

- Make sure the AM loop antenna lead terminals do not touch metal parts of the panel.

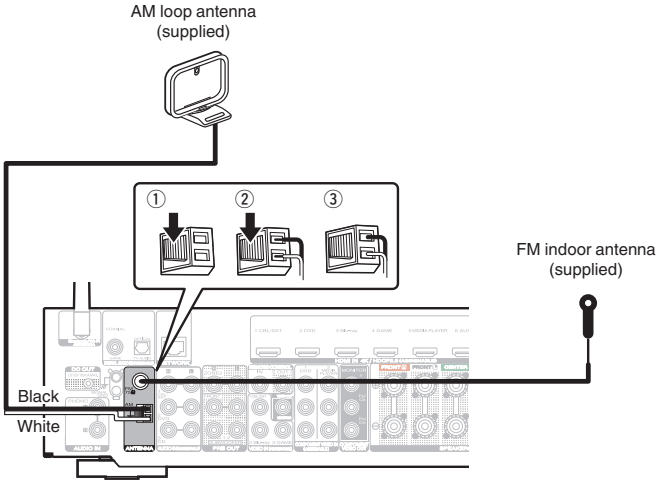

■ Using the AM loop antenna

Suspending on a wall

Suspend directly on a wall without assembling.

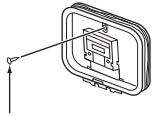

Standing alone

Use the procedure shown above to assemble.

When assembling, refer to “AM loop antenna assembly”.

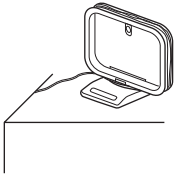

■ AM loop antenna assembly

1 **Put the stand section through the bottom of the loop antenna from the rear and bend it forward.**

2 **Insert the projecting part into the square hole in the stand.**

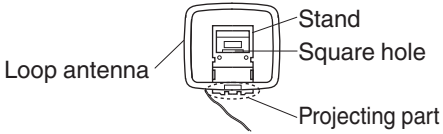

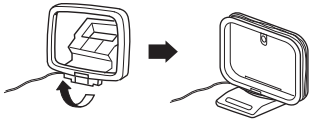

Connecting to a home network (LAN)

This unit can connect to a network using a wired LAN or wireless LAN.

You can connect this unit to your home network (LAN) to enable various types of playback and operations as described below.

- Playback of network audio such as Internet Radio and from your media server(s)
- Playback of streaming music services
- Using the Apple AirPlay function
- Operation on this unit via the network
- Operation with the HEOS wireless multi-room sound system
- Firmware Update

For connections to the Internet, contact an ISP (Internet Service Provider) or a computer shop.

Wired LAN

To make connections via wired LAN, use a LAN cable to connect the router to this unit as shown in the figure below.

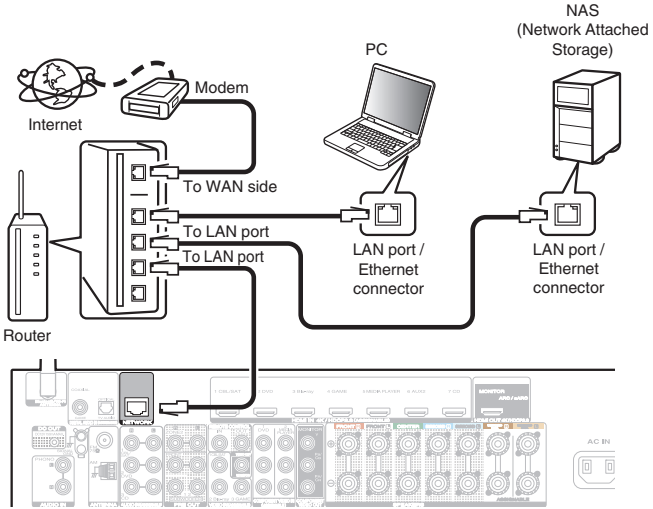

Wireless LAN

When connecting to the network via wireless LAN, connect the external antennas for Bluetooth/wireless connectivity connection to the rear panel and stand them upright.

See “Wi-Fi Setup” on how to connect to a wireless LAN router. (☞ p. 203)

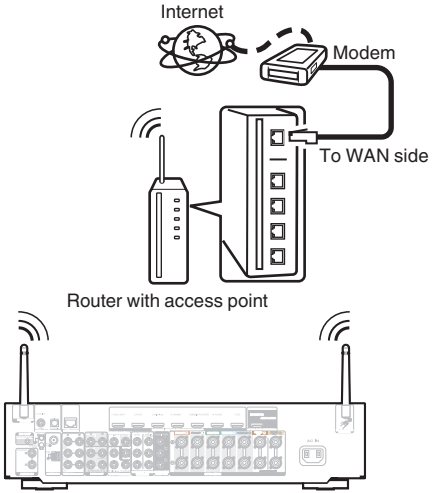

- When using this unit, we recommend you use a router equipped with the following functions:
  - Built-in DHCP server
    This function automatically assigns IP addresses on the LAN.
  - Built-in 100BASE-TX switch
    When connecting multiple devices, we recommend a switching hub with a speed of 100 Mbps or greater.
- Only use a shielded STP or ScTP LAN cable (readily available at electronics stores). (CAT-5 or greater recommended)
- The normal shielded-type LAN cable is recommended.
  If a flat-type cable or unshielded-type cable is used, other devices could be affected by noise.
- When using this unit connected to a network with no DHCP function, configure the IP address, etc. in “Network”. (☞ p. 202)

NOTE

- The types of routers that can be used depend on the ISP. Contact your ISP or a computer shop for details.
- This unit is not compatible with PPPoE. A PPPoE compatible router is required if your contracted line is not set using PPPoE.
- Do not connect a NETWORK connector directly to the LAN port / Ethernet connector on your computer.
- Various online services may be discontinued without prior notice.

Connecting an external control device

REMOTE CONTROL jacks

■ Performing operations by RC on this unit without visual contact

You can connect an external IR receiver to the REMOTE CONTROL connectors to perform operations on this unit with the supplied remote control unit without visual contact. This might be necessary if the unit is hidden in a cupboard or corner, so you can't directly point with the remote control unit to the device.

To do this, disable the remote control signal receiving function ("Remote lock function" (☞ p. 141)).

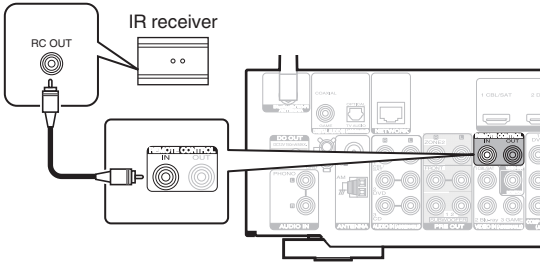

NOTE

- When the remote control signal receiving function is disabled, you can not perform operations with the remote control unit.

■ Remotely connecting Marantz devices

When you are using a Marantz device other than this unit that supports remote connection, you can transmit remote control signals just by connecting the device to the REMOTE CONTROL IN/OUT connector with a monaural cable.

Set the remote control switch located on the rear panel of the connected audio component to "EXTERNAL" or "EXT." to use this feature.

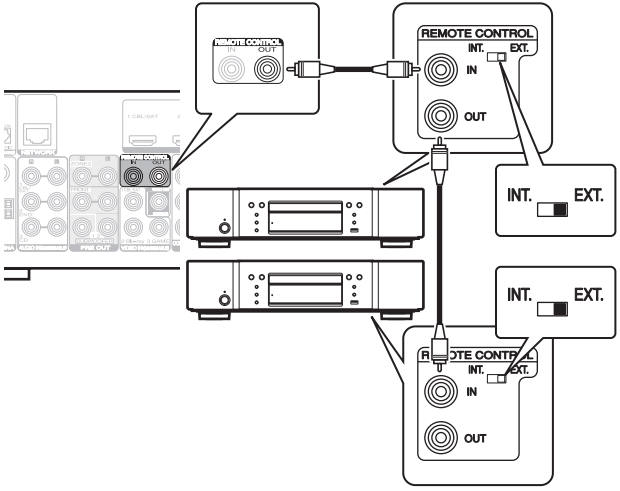

DC OUT jack

When a device with DC IN jack is connected, the connected device's power on/standby can be controlled through linked operation to this unit.
The DC OUT jack outputs a maximum 12 V DC/150 mA electrical signal.

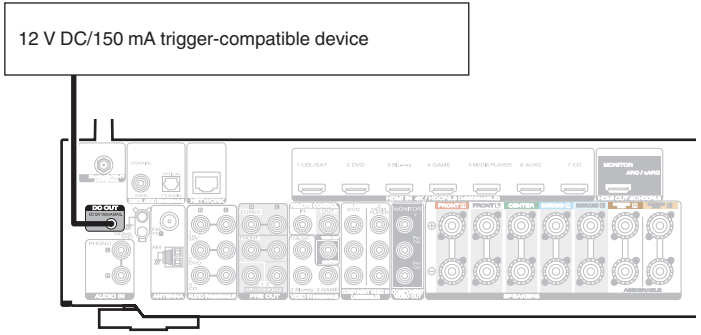

NOTE

- Use a monaural mini-plug cable for connecting the DC OUT jack. Do not use a stereo mini-plug cable.
- If the permissible trigger input level for the connected device is larger than 12 V DC/150 mA, or has shorted, the DC OUT jack cannot be used. In this case, turn off the power to the unit, and disconnect it.

Connecting the power cord

After completing all the connections, insert the power plug into the power outlet.

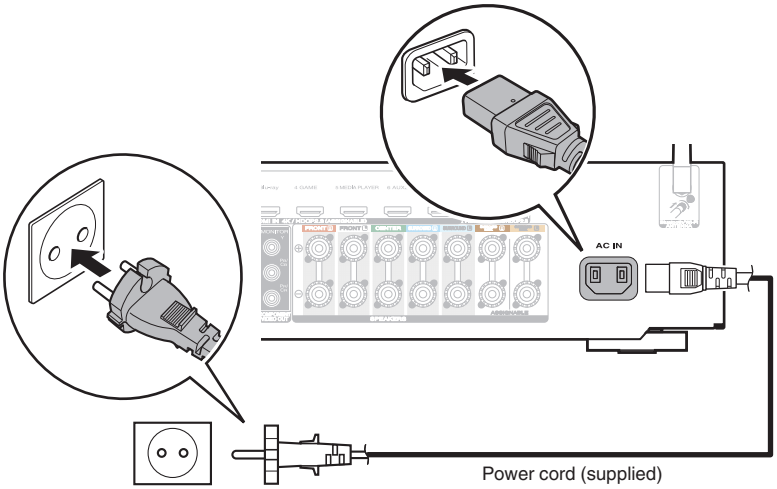

■ Contents

Basic operation

Turning the power on 71
Selecting the input source 71
Adjusting the volume 72
Turning off the sound temporarily (Muting) 72
Selecting a sound mode 119

Playback a device

Playing a DVD player/Blu-ray Disc player 72
Playing a USB memory device 73
Listening to music on a Bluetooth device 77
Listening to FM/AM broadcasts 81

Playback network audio/service

Listening to Internet Radio 92
Playing back files stored on a PC or NAS 94
Getting the HEOS App 98
AirPlay function 107
Spotify Connect function 110

Convenience functions

Convenience functions 111
HDMI Control function 131
Smart Menu function 132
Sleep timer function 134
Smart select function 136
Panel lock function 139
Remote lock function 141

Other functions

Web control function 142
Playback in ZONE2 (Another room) 144

Basic operation

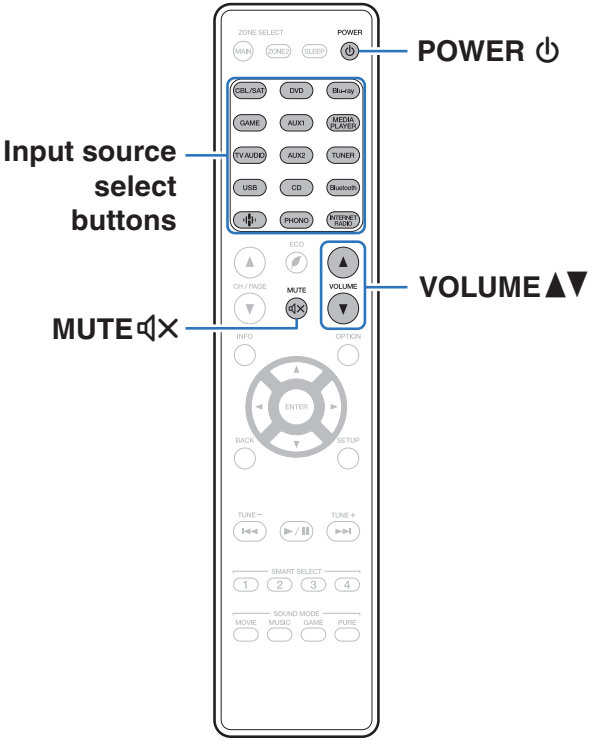

Turning the power on

1 **Press POWER ⏻ to turn on power to the unit.**

- You can press the input source select button when the unit is in standby mode to turn on the power.
- You can also switch the power to standby by pressing ⏻ on the main unit.

Selecting the input source

1 **Press the input source select button to be played back.**

The desired input source can be selected directly.

- You can also select the input source by turning INPUT SELECTOR on the main unit.

Adjusting the volume

1 Use VOLUME ▲▼ to adjust the volume.

- The variable range differs according to the input signal and channel level setting.
- You can also adjust the master volume by turning VOLUME on the main unit.

Turning off the sound temporarily (Muting)

1 Press MUTE 🔇.

- MUTE indicator on the display flashes.
- 🔇 appears on the TV screen.

- The sound is reduced to the level set at “Mute Level” in the menu. (☞ p. 159)
- To cancel mute, either adjust the sound volume or press MUTE 🔇 again.

Playback a DVD player/Blu-ray Disc player

The following describes the procedure for playing DVD player/Blu-ray Disc player.

1 Prepare for playback.

① Turn on the power of the TV, subwoofer and player.
② Change the TV input to the input of this unit.

2 Press POWER ⏻ to turn on power to the unit.

3 Press DVD or Blu-ray to switch an input source for a player used for playback.

4 Play the DVD player or Blu-ray Disc player.

■ Surround playback (☞ p. 119)

Playing a USB memory device

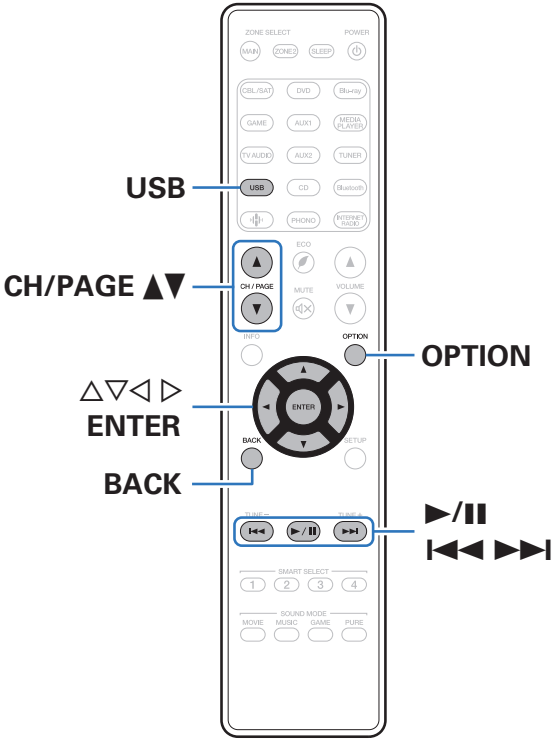

- Playing back music files stored on a USB memory device.
- Only USB memory devices conforming to mass storage class standards can be played on this unit.
- This unit is compatible with USB memory devices in “FAT32” or “NTFS” format.
- The audio format types and specifications supported by this unit for playback are as follows.
  See “Playing back a USB memory devices” (☞ p. 254) for details.
  - **WMA**
  - **MP3**
  - **WAV**
  - **MPEG-4 AAC**
  - **FLAC**
  - **Apple Lossless**
  - **DSD**

Playing files stored on USB memory devices

1 **Insert a “FAT32” or “NTFS” formatted USB memory device into the USB port.**

2 **Press USB to switch the input source to “USB”.**

3 **Select the name of this unit.**

4 **Browse the music on your USB memory device and select something to play.**

- When you select something to play you will be asked how you want to queue up your music.

Play Now:	Inserts the item into the queue after the currently playing track and plays the selected item immediately.
Play Now & Replace Queue:	Clears the queue and plays the selected item immediately.
Play Next:	Inserts the item into the queue after the current song and plays it when the current song ends.
Add to End of Queue:	Adds the item to the end of the queue.

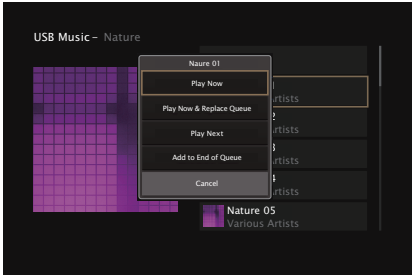

5 **Use △▽ to select the “Play Now” or “Play Now & Replace Queue”, then press ENTER.**

Playback starts.

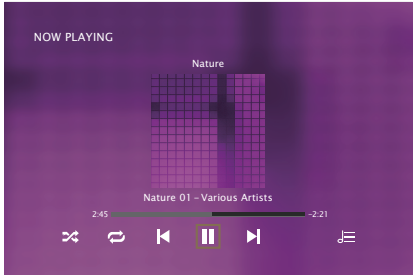

Operation buttons	Function
▶/II	Playback / Pause
◀◀ ▶▶	Skip to previous track / Skip to next track
CH/PAGE ▲▼	Switch to the previous page/next page in the list display

- When an MP3 music file includes album art data, the album art can be displayed while playing the file.

NOTE

- Note that Marantz will accept no responsibility whatsoever for any problems arising with the data on a USB memory device when using this unit in conjunction with the USB memory device.
- When a USB memory device is connected to this unit, the unit loads all of the files on the USB memory device. Loading may take a while if the USB memory device contains a large number of folders and/or files.

■ Operations accessible through the option menu

- “Adjusting the volume of each channel to match the input source (Channel Level Adjust)” (☞ p. 114)
- “Adjusting the tone (Tone)” (☞ p. 115)
- “Displaying your desired video during audio playback (Video Select)” (☞ p. 116)
- “Playing the same music in all zones (All Zone Stereo)” (☞ p. 118)

Listening to music on a Bluetooth device

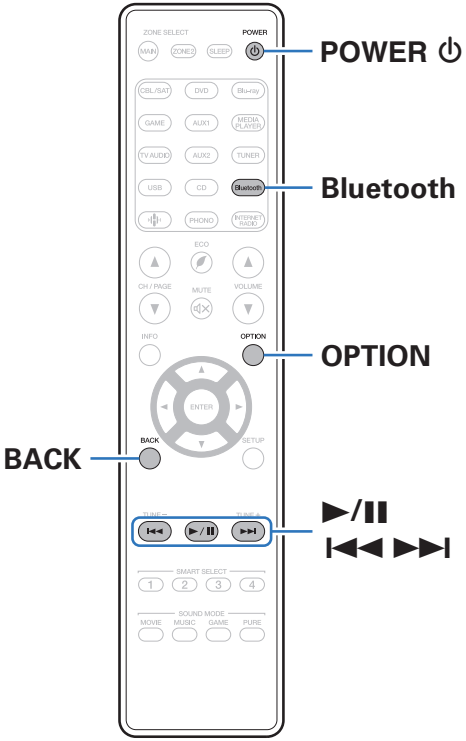

Music files stored on Bluetooth devices such as smartphones, digital music players, etc. can be enjoyed on this unit by pairing and connecting this unit with the Bluetooth device.

Communication is possible up to a range of about 30 m.

NOTE

- To play back music from a Bluetooth device, the Bluetooth device needs to support the A2DP profile.

Playing music from Bluetooth device

In order to enjoy music from a Bluetooth device on this unit, the Bluetooth device must first be paired with this unit.
Once the Bluetooth device has been paired, it does not need to be paired again.

1 Prepare for playback.

① Connect the supplied external antennas for Bluetooth/wireless connectivity to the Bluetooth/wireless LAN antenna connectors on the rear panel. (☞ p. 23)
② Press POWER ⏻ to turn on power to the unit.

2 Press Bluetooth.

When using for the first time, the unit will go into the pairing mode automatically and “Pairing...” will appear on the display of the unit.

3 Activate the Bluetooth settings on your mobile device.

4 Select this unit when its name appears in the list of devices displayed on the screen of the Bluetooth device.

Connect to the Bluetooth device while “Pairing” is being displayed on the display of the unit.
Perform the connection with the Bluetooth device close to the unit (about 1 m).

5 Play music using any app on your Bluetooth device.

- The Bluetooth device can also be operated with the remote control of this unit.
- The next time the Bluetooth button is pressed on the remote control unit, this unit automatically connects to the last Bluetooth device that was connected.

Operation buttons	Function
▶/II	Playback / Pause
⏮ ⏭	Skip to previous track / Skip to next track

- Press STATUS on this unit during playback to switch the display between Title name, Artist name, Album name, etc.

Pairing with other Bluetooth devices

Pair a Bluetooth device with this unit.

1 Activate the Bluetooth settings on your mobile device.

2 Press and hold Bluetooth on the remote control unit for at least 3 seconds.

This unit will go into the pairing mode.

3 Select this unit when its name appears in the list of devices displayed on the screen of the Bluetooth device.

- This unit can be paired with a maximum of 8 Bluetooth devices. When a 9th Bluetooth device is paired, it will be registered in place of the oldest registered device.
- You can also enter pairing mode by pressing the OPTION button when the Bluetooth playback screen is displayed and selecting “Pairing Mode” from the displayed option menu.

NOTE

- To operate the Bluetooth device with the remote control of this unit, the Bluetooth device needs to support the AVRCP profile.
- The remote control of this unit is not guaranteed to work with all Bluetooth devices.
- Depending on the type of Bluetooth device, this unit outputs audio that is coupled to the volume setting on the Bluetooth device.

■ Operations accessible through the option menu

- “Pairing with other Bluetooth devices” (☞ p. 79)
- “Adjusting the volume of each channel to match the input source (Channel Level Adjust)” (☞ p. 114)
- “Adjusting the tone (Tone)” (☞ p. 115)
- “Displaying your desired video during audio playback (Video Select)” (☞ p. 116)
- “Playing the same music in all zones (All Zone Stereo)” (☞ p. 118)

Reconnecting to this unit from a Bluetooth device

After pairing is completed, the Bluetooth device can be connected without performing any operations on this unit.

This operation also needs to be performed when switching the Bluetooth device for playback.

1 **If a Bluetooth device is currently connected, deactivate the Bluetooth setting of that device to disconnect it.**

2 **Activate the Bluetooth setting of the Bluetooth device to be connected.**

3 **Select this unit from the Bluetooth device list on your Bluetooth device.**

4 **Play music using any app on your Bluetooth device.**

- The screen automatically switches to the “Bluetooth” playback screen if a Bluetooth device is connected while the power of this unit is on.
- When the “Network Control” setting of this unit is set to “Always On” and a Bluetooth device is connected with the unit in the standby state, the power of the unit will be turned on automatically. (☞ p. 207)

Listening to FM/AM broadcasts

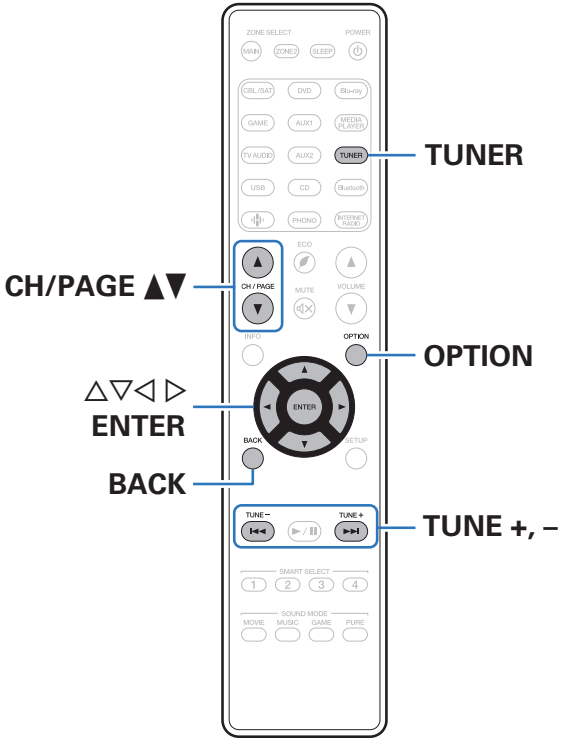

You can use the built-in tuner of this unit to listen to FM broadcasts and AM broadcasts.
Make sure the FM antenna and AM loop antenna are connected to this unit first.

Listening to FM/AM broadcasts

1 **Connect the antenna. (“Connecting FM/AM antennas” (☞ p. 63))**

2 **Press TUNER to switch the input source to “Tuner”.**

【TV screen】

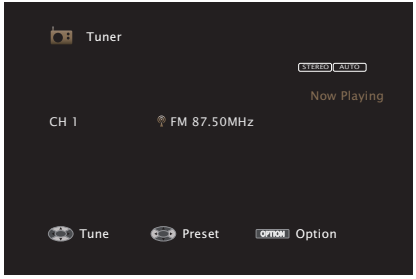

【Display of this unit】

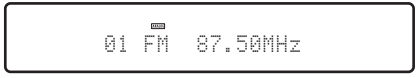

3 **Press OPTION.**

The option menu screen is displayed.

4 **Use △▽ to select “FM/AM”, then press ENTER.**

This displays the reception band input screen.

5 **Use ◁ ▷ to select “FM” or “AM”, then press ENTER.**

FM:	When listening to an FM broadcast.
AM:	When listening to an AM broadcast.

6 **Press TUNE + or TUNE – to select the station you want listen to.**

Scanning is performed until it finds an available radio station. When it finds a radio station, it stops the scan automatically and tunes in.

- The modes for receiving FM broadcasts consists of “Auto” mode that automatically searches available broadcast stations and “Manual” mode that lets you tune in using buttons to change the frequency. The default setting is “Auto”. You can also use “Direct Tune” to tune in by entering the frequency directly.
  In “Auto” mode, you cannot tune in to radio stations if the reception is not good. If this is the case, then use the “Manual” mode or “Direct Tune” mode to tune in.

Operation buttons	Function
TUNE +, –	Selects the radio station (up/down)
CH/PAGE ▲▼	Selects preset radio stations
△▽	Selects the radio station (up/down)
◁ ▷	Selects preset radio stations

Operations accessible through the option menu

- “Tuning in by entering the frequency (Direct Tune)” (☞ p. 84)
- “ RDS Search ” (☞ p. 84)
- “ PTY Search ” (☞ p. 85)
- “ TP Search ” (☞ p. 86)
- “ Radio text ” (☞ p. 86)
- “Changing the tune mode (Tune Mode)” (☞ p. 87)
- “Tuning in to stations and presetting them automatically (Auto Preset Memory)” (☞ p. 87)
- “Presetting the current broadcast station (Preset Memory)” (☞ p. 88)
- “Specify a name for the preset broadcast station (Preset Name)” (☞ p. 89)
- “Skipping preset broadcast stations (Preset Skip)” (☞ p. 90)
- “Adjusting the volume of each channel to match the input source (Channel Level Adjust)” (☞ p. 114)
- “Adjusting the tone (Tone)” (☞ p. 115)
- “Displaying your desired video during audio playback (Video Select)” (☞ p. 116)
- “Playing the same music in all zones (All Zone Stereo)” (☞ p. 118)

Tuning in by entering the frequency (Direct Tune)

You can enter the receiving frequency directly to tune in.

1 **Press OPTION when the input source is “Tuner”.**

The option menu screen is displayed.

2 **Use △▽ to select “Direct Tune”, then press ENTER.**

The screen that lets you enter the frequency is displayed.

3 **Use △▽ to select a number, then press ▷.**

- If ◁ is pressed, the immediately preceding input is cancelled.

4 **Repeat step 3 and enter the frequency of the radio station you want to hear.**

5 **When setting is completed, press ENTER.**

The preset frequency is tuned in.

RDS Search

RDS is a broadcasting service which allows a station to send additional information along with the regular radio program signal.

Use this function to automatically tune to FM stations that provide the RDS service.

Note that the RDS function only works when receiving RDS compatible stations.

1 **Press OPTION when the input source is “Tuner”.**

The option menu screen is displayed.

2 **Use △▽ to select “RDS Search”, then press ENTER.**

3 **Press ENTER.**

The search for RDS stations begins automatically.

- If you use ◁ ▷ within 5 seconds after the broadcast station name is shown on the display, you can search for a different station.

PTY Search

Use this function to find RDS stations broadcasting a designated program type (PTY).
PTY identifies the type of RDS program.
The program types and their displays are as follows:

NEWS	News	**WEATHER**	Weather
AFFAIRS	Current Affairs	**FINANCE**	Finance
INFO	Information	**CHILDREN**	Children's program
SPORT	Sports	**SOCIAL**	Social Affairs
EDUCATE	Education	**RELIGION**	Religion
DRAMA	Drama	**PHONE IN**	Phone In
CULTURE	Culture	**TRAVEL**	Travel
SCIENCE	Science	**LEISURE**	Leisure
VARIED	Varied	**JAZZ**	Jazz Music
POP M	Pop Music	**COUNTRY**	Country Music
ROCK M	Rock Music	**NATION M**	National Music
EASY M	Easy Listening Music	**OLDIES**	Oldies Music
LIGHT M	Light Classical	**FOLK M**	Folk Music
CLASSICS	Serious Classical	**DOCUMENT**	Documentary
OTHER M	Other Music		

1 **Press OPTION when the input source is "Tuner".**
The option menu screen is displayed.

2 **Use △▽ to select "PTY Search", then press ENTER.**

3 **Use △▽ to call out the desired program type.**

4 **Press ENTER.**
PTY search begins automatically.

- If you use ◁ ▷ within 5 seconds after the broadcast station name is shown on the display, you can search for a different station.

TP Search

TP identifies programs that carry traffic announcements.
This allows you to easily find out the latest traffic conditions in your area before leaving home.
Use this function to find RDS stations broadcasting traffic programs (TP stations).

1 **Press OPTION when the input source is “Tuner”.**
The option menu screen is displayed.

2 **Use △▽ to select “TP Search”, then press ENTER.**

3 **Press ENTER.**
TP search begins automatically.

- If you use ◁ ▷ within 5 seconds after the broadcast station name is shown on the display, you can search for a different station.

Radio text

RT allows RDS stations to send text messages that appear on the display.
“Radio text” appears on the display when radio text data is received.

1 **Press OPTION when the input source is “Tuner”.**
The option menu screen is displayed.

2 **Use △▽ to select “Radio text”, then press ENTER.**

3 **Use ◁ ▷ to select “On”, then press ENTER.**
- While receiving an RDS broadcast station, the text data broadcast from the station is displayed.
- If no text data is being broadcast, “NO TEXT DATA” is displayed.

Changing the tune mode (Tune Mode)

You can change the mode for tuning into FM and AM broadcasts. If you cannot tune in automatically with “Auto” mode, change the mode to “Manual” and tune in manually.

1 Press OPTION when the input source is “Tuner”.

The option menu screen is displayed.

2 Use △▽ to select “Tune Mode”, then press ENTER.

3 Use ◁ ▷ to select the tune mode, then press ENTER.

Auto:	Automatically search for and tune to a receivable radio station.
Manual:	Manually change the frequency one step at a time each time the button is pressed.

Tuning in to stations and presetting them automatically (Auto Preset Memory)

A maximum of 56 radio stations can be automatically preset.

1 Press OPTION when the input source is “Tuner”.

The option menu screen is displayed.

2 Use △▽ to select “Auto Preset Memory”, then press ENTER.

3 Press ENTER.

The unit starts to tune in to radio stations automatically and preset them.

- When presetting is completed, “Completed” is displayed for about 5 seconds and the option menu screen turns off.

- The preset memory is overwritten.

Presetting the current broadcast station (Preset Memory)

Your favorite broadcast stations can be preset so that you can tune them in easily.

Up to 56 stations can be preset.

1 **Tune in the broadcast station you want to preset. (“Listening to FM/AM broadcasts” (☞ p. 82))**

2 **Press OPTION.**

The option menu screen is displayed.

3 **Use △▽ to select “Preset Memory”, then press ENTER.**

The list of already preset channels is displayed.

4 **Use △▽ to select the channel you want to preset, then press ENTER.**

The current broadcast station that is preset.

- To preset other stations, repeat steps 1 to 4.

Channel	Default settings
1 – 8	87.50 / 89.10 / 98.10 / 108.00 / 90.10 / 90.10 / 90.10 / 90.10 MHz
9 – 16	90.10 / 90.10 / 90.10 / 90.10 / 90.10 / 90.10 / 90.10 / 90.10 MHz
17 – 24	90.10 / 90.10 / 90.10 / 90.10 / 90.10 / 90.10 / 90.10 / 90.10 MHz
25 – 32	90.10 / 90.10 / 90.10 / 90.10 / 90.10 / 90.10 / 90.10 / 90.10 MHz
33 – 40	90.10 / 90.10 / 90.10 / 90.10 / 90.10 / 90.10 / 90.10 / 90.10 MHz
41 – 48	90.10 / 90.10 / 90.10 / 90.10 / 90.10 / 90.10 / 90.10 / 90.10 MHz
49 – 56	90.10 / 90.10 / 90.10 / 90.10 / 90.10 / 90.10 / 90.10 / 90.10 MHz

Listening to preset stations

1 **Use CH/PAGE ▲▼ to select the desired preset channel.**

Specify a name for the preset broadcast station (Preset Name)

You can set the name to the preset broadcast station or change it.
Up to 8 characters can be input.

1 **Press OPTION when the input source is “Tuner”.**

The option menu screen is displayed.

2 **Use △▽ to select “Preset Name”, then press ENTER.**

The “Preset Name” screen is displayed.

3 **Use ◁ ▷ to select the group of the broadcast station you want to name.**

4 **Use △▽ to select the broadcast station you want to name, then press ENTER.**

5 **Use △▽ to select a name label, then press ENTER.**

The screen that lets you edit the Preset Name is displayed.

- If you select “Set Defaults”, then the unit returns to displaying the frequency.

6 **Enter the characters, then press “OK”.**

7 **Press OPTION to return to the previous screen.**

Skipping preset broadcast stations (Preset Skip)

Perform auto preset memory to save all the broadcasting stations that can be received in the memory. Selecting a broadcast station becomes easier by skipping unnecessary memories.

1 **Press OPTION when the input source is “Tuner”.**

The option menu screen is displayed.

2 **Use △▽ to select “Preset Skip”, then press ENTER.**

The “Preset Skip” screen is displayed.

3 **❑ To set the stations you want to skip by groups**

① Use ◁ ▷ to select the group of broadcast stations you want to skip.
② Press △ to select “Set No.∗ – ∗ to Skip”, then press ENTER.
Skip all the broadcast stations that are included in the selected group “∗-∗”.
(∗ is the selected group number.)

❑ To set the stations you want to skip by stations

① Use ◁ ▷ to select the group of broadcast stations you want to skip.
② Use △▽ to select the broadcast station you want to skip.
③ Use ◁ ▷ to select “Skip”.
The station you selected is not displayed.

4 **Press OPTION to return to the previous screen.**

Cancelling Preset Skip

1 **While the “Preset Skip” screen is displayed, use ◁ ▷ to select a group containing a broadcast station to cancel the skip for.**

2 **Use △▽ to select a broadcast station to cancel the skip for.**

3 **Use ◁ ▷ to select “On”.**

The skip is cancelled.

NOTE

- “Preset Skip” cannot be cancelled for groups.

Listening to Internet Radio

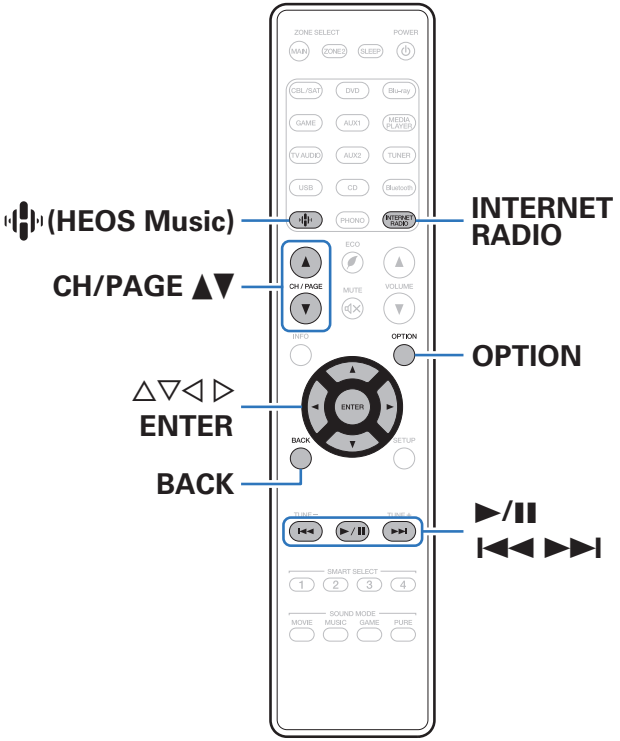

- Internet Radio refers to radio broadcasts distributed over the Internet. Internet Radio stations from around the world can be received.
- The Internet Radio station list on this unit the database service provided by TuneIn Radio service.
- The audio format types and specifications supported by this unit for playback are as follows.
  See “Playing back Internet Radio” (☞ p. 257) for details.
  - **WMA**
  - **MP3**
  - **MPEG-4 AAC**

Listening to Internet Radio

1 **Press INTERNET RADIO.**

- You can also press (HEOS Music). Use △▽ to select “TuneIn Internet Radio”, then press ENTER.

2 **Select the station you want to play.**

Operation buttons	Function
▶/II*	Playback / Pause
⏮ ⏭ *	Skip to previous track / Skip to next track
CH/PAGE ▲▼	Switch to the previous page/next page in the list display

* Enabled when playing Podcasts.

- The display switches between track title and radio station name etc. each time the main unit’s STATUS is pressed.

NOTE

- The radio station database service may be suspended or be otherwise unavailable without notice.

■ Operations accessible through the option menu

- “Adding to HEOS Favorites” (☞ p. 112)
- “Adjusting the volume of each channel to match the input source (Channel Level Adjust)” (☞ p. 114)
- “Adjusting the tone (Tone)” (☞ p. 115)
- “Displaying your desired video during audio playback (Video Select)” (☞ p. 116)
- “Playing the same music in all zones (All Zone Stereo)” (☞ p. 118)

Playing back files stored on a PC or NAS

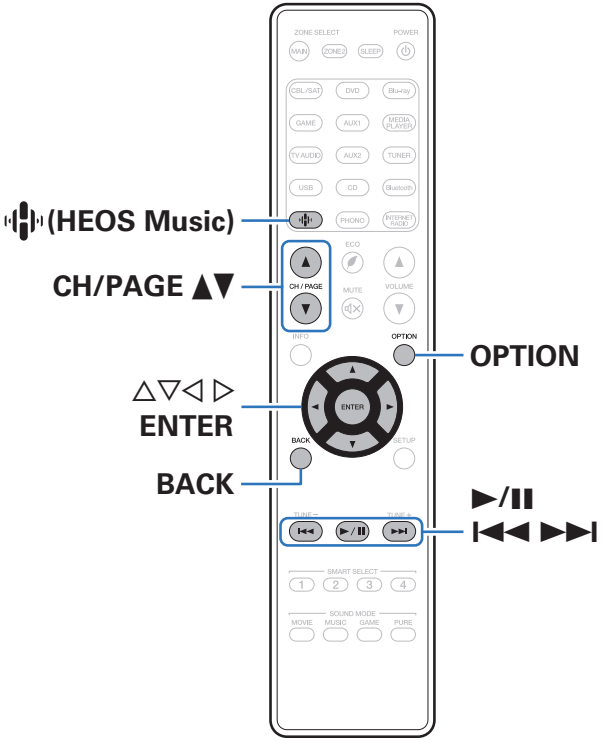

- This unit can play back music files and playlists (m3u, wpl) from DLNA compatible servers including PCs and NAS devices on your network.
- Supported file formats:
  For details, see “Playing back a file saved on a PC or NAS” (☞ p. 256).
  - **WMA**
  - **MP3**
  - **WAV**
  - **MPEG-4 AAC**
  - **FLAC**
  - **Apple Lossless**
  - **DSD**

Playing back files stored on a PC or NAS

Use this procedure to play music files or playlists stored on DLNA files servers on your local network.

1 **Press (HEOS Music).**

2 **Use △▽ to select “Music Servers”, then press ENTER.**

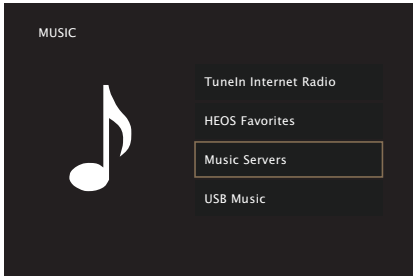

3 **Select the name of your networked PC or NAS (Network Attached Storage) server.**

4 **Browse the music on your PC/NAS and select something to play.**

- When you select something to play you will be asked how you want to queue up your music.

Play Now:	Inserts the item into the queue after the currently playing track and plays the selected item immediately.
Play Now & Replace Queue:	Clears the queue and plays the selected item immediately.
Play Next:	Inserts the item into the queue after the current song and plays it when the current song ends.
Add to End of Queue:	Adds the item to the end of the queue.

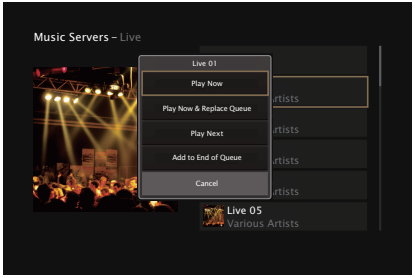

5 **Use △▽ to select the “Play Now” or “Play Now & Replace Queue”, then press ENTER.**

Playback starts.

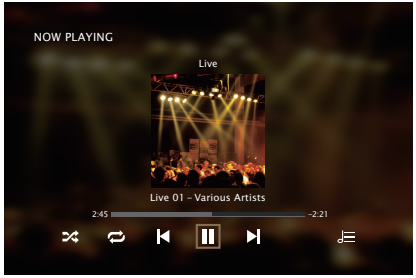

Operation buttons	Function
►/II	Playback / Pause
I◄◄ ►►I	Skip to previous track / Skip to next track
CH/PAGE ▲▼	Switch to the previous page/next page in the list display

- The display switches between track title, artist name, and album title each time the main unit’s STATUS is pressed.
- When a WMA (Windows Media Audio), MP3 or MPEG-4 AAC file includes album art data, the album art can be displayed while the music files are playing.
- If you use Ver.11 or later of Windows Media Player, the album art for WMA files can be displayed.

NOTE

- When playing back music files with your PC or NAS connected through wireless LAN, audio may be interrupted depending on your wireless LAN environment. In this case, connect using a wired LAN.
- The order in which the tracks/files are displayed depends on the server specifications. If the tracks/files are not displayed in alphabetical order due to the server specifications, searching by the first letter may not work properly.

■ Operations accessible through the option menu

- “Adjusting the volume of each channel to match the input source (Channel Level Adjust)” (☞ p. 114)
- “Adjusting the tone (Tone)” (☞ p. 115)
- “Displaying your desired video during audio playback (Video Select)” (☞ p. 116)
- “Playing the same music in all zones (All Zone Stereo)” (☞ p. 118)

Getting the HEOS App

You can use many online music streaming services from the HEOS App. Depending upon your geographical location, there are several options to choose from.

Download the HEOS App for iOS or Android by searching App Store, Google Play store or Amazon Appstore for “HEOS”.

HEOS Account

HEOS Accounts can be registered in “HEOS Account” (☞ p. 209) in the menu of this unit or by tapping “Music” tab - “Settings” icon in the HEOS App.

■ What is a HEOS Account?

A HEOS Account is master account or “keychain” for managing all of your HEOS music services with one single username and password.

■ Why do I need a HEOS Account?

With the HEOS Account you just have to enter your music services login names and passwords one time. This allows you to easily and quickly use multiple controller apps on different devices.

You just log into your HEOS Account on any device and you will have access to all of your associated music services, play history and custom playlists, even if you are at a friend’s house listening to music on their HEOS system.

■ Signing up for a HEOS Account

You will be instructed to signup for a HEOS Account the first time you try to access any music service from the main “Music” menu of the HEOS App.

■ Changing your HEOS Account

1 **Tap the “Music” tab.**

2 **Select the Settings icon in the upper left corner of the screen.**

3 **Select “HEOS Account”.**

4 **Change your location, change your password, delete your account or sign out of your account.**

Playing from streaming music services

A music service is an online music company that provides access to vast music collections via free and/or paid subscriptions. Depending upon your geographical location, there are several options to choose from.

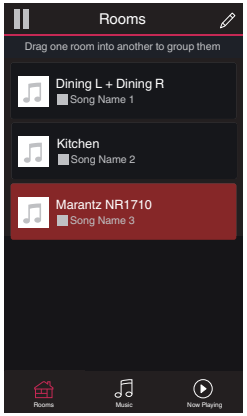

NOTE

- The HEOS app and brand is not affiliated with any manufacturer of any mobile device. Availability of music services may vary by region. Not all services may be available at time of purchase. Some services may be added or discontinued from time to time based on decisions of the music service providers or others.

■ Selecting a room/device

1 Tap the “Rooms” tab, and select “Marantz NR1710” if there are multiple HEOS devices.

- Tap the Pencil icon at the top right to switch edit mode. You can change the displayed name.

■ Selecting the music track or station from music sources

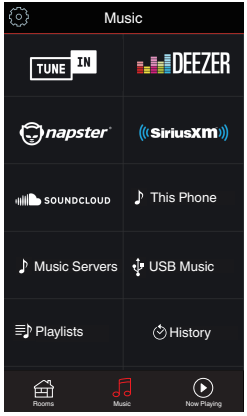

1 **Tap the “Music” tab and select a music source.**

- All music services displayed may not be available in your location.

2 Browse the music to play.

After selecting a music track or radio station the app will automatically change to the “Now Playing” screen.

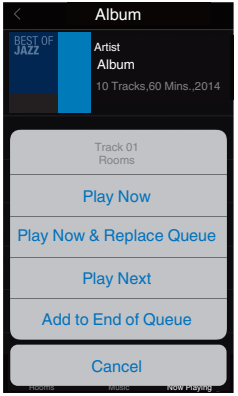

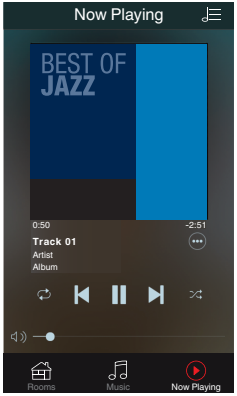

- When you select a music track to play you will be asked how you want to queue up your music.

Play Now:	Inserts the item into the queue after the currently playing track and plays the selected item immediately.
Play Now & Replace Queue:	Clears the queue and plays the selected item immediately.
Play Next:	Inserts the item into the queue after the current song and plays it when the current song ends.
Add to End of Queue:	Adds the item to the end of the queue.

- When you select a radio station the following items are displayed.

Play Now:	Plays the selected item immediately.
Add to HEOS Favorites:	Adds to HEOS Favorites.

Listening to the same music in multiple rooms

The HEOS system is a true multi-room audio system that automatically synchronizes audio playback between multiple HEOS devices so that the audio coming from different rooms is perfectly in sync and always sounds amazing! You can easily add up to 32 HEOS devices to your HEOS system. You can join or group up to 16 individual HEOS devices into a group of HEOS devices that function as if they were a single HEOS device.

■ Grouping rooms

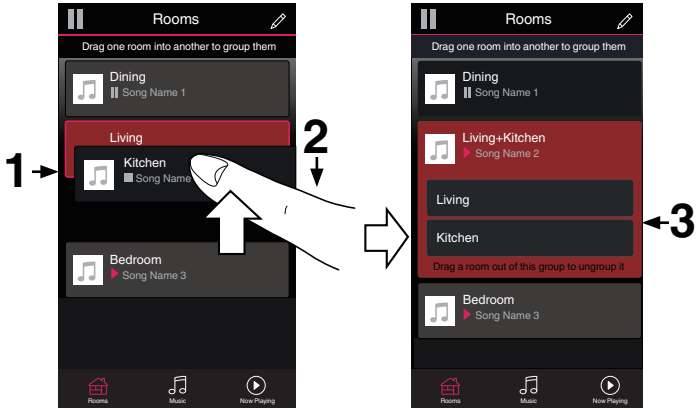

1 **Press and hold your finger on room that is not playing music.**

2 **Drag it into the room that is playing music (indicated by the red outline) and lift your finger.**

3 **The two rooms will be grouped together into a single device group and both rooms will be playing the same music in perfect sync.**

■ Ungrouping rooms

1 **Press and hold your finger on room that you want to remove from the group.**

2 **Drag it out of the group and lift your finger.**

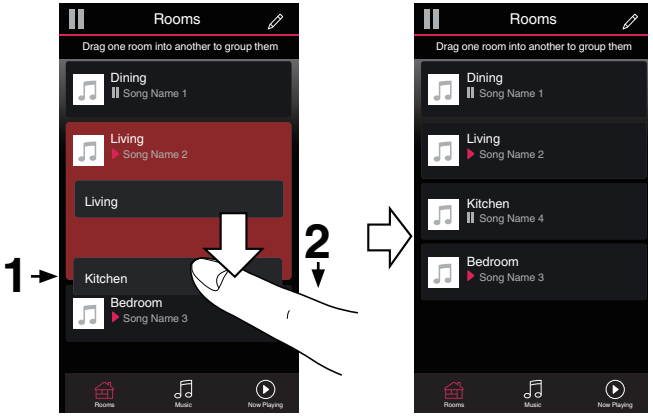

NOTE

- You can not remove the first room that started playing the music before grouping.

■ Grouping all rooms (party mode)

You can easily group 16 rooms together into Party Mode by using a "pinch" gesture.

1 **Place two fingers on the screen over the list of rooms.**

2 **Quickly pinch your two fingers together and release.**

3 **All of your rooms will be joined together and begin playing the same music in perfect sync.**

■ Ungrouping all rooms

You can easily ungroup all of your rooms and exit Party Mode by using a "spread" gesture.

1 **Place two fingers close together on the screen over list of rooms.**

2 **Quickly spread your two fingers apart from each other and release.**

3 **All of your rooms will be ungrouped.**

AirPlay function

Music files stored on your iPhone, iPod touch, iPad or iTunes can be played on this unit via the network.

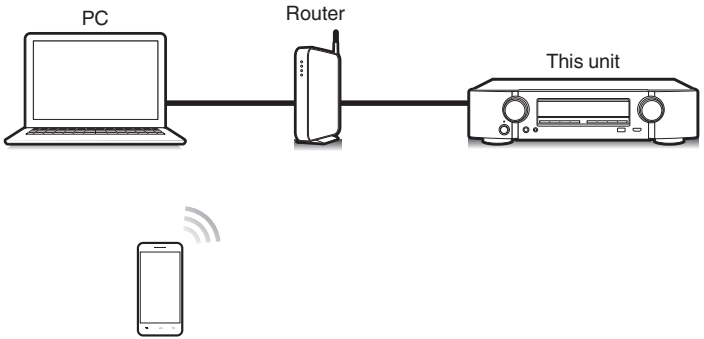

- Source input will be switched to “HEOS Music” when AirPlay playback is started.
- You can stop AirPlay playback by choosing other input source.
- To see song and artist names together, press STATUS on the main unit.
- For information about how to use iTunes, also see the Help for iTunes.
- The screen may differ depending on the OS and software versions.

This unit supports AirPlay 2.

Sync multiple AirPlay 2 compatible devices/speakers for simultaneous playback.

- This unit supports AirPlay 2 and requires iOS 11.4 or later.

Playing songs from your iPhone, iPod touch or iPad

If you update your “iPhone/iPod touch/iPad” to iOS 4.2.1 or later, you can stream music stored in your “iPhone/iPod touch/iPad” directly to this unit.

1 Connect your iPhone, iPod touch or iPad Wi-Fi to the same network as this unit.

- For details, see your device’s manual.

2 Play the song on your iPhone, iPod touch or iPad.

AirPlay icon is displayed on the iPhone, iPod touch or iPad screen.

3 Tap the AirPlay icon and select this unit.

[Example] iOS 12

[Example] iOS 9

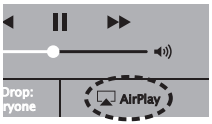

Playing iTunes music with this unit

1 Install iTunes 10, or later, on a Mac or Windows PC that is connected to the same network as this unit.

2 Turn this unit ON.

Set “Network Control” to “Always On” for this unit. (☞ p. 207)

NOTE

- When “Network Control” is set to “Always On”, the unit consumes more standby power.

3 Start iTunes and click the AirPlay icon to select this unit.

[Example] iTunes

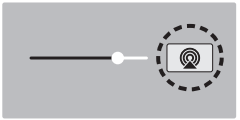

4 Choose a song and click play in iTunes.

The music will stream to this unit.

NOTE

- In playback using the AirPlay function, the sound is output at the iPhone, iPod touch, iPad or iTunes volume setting level.
  You should turn down the iPhone, iPod touch, iPad or iTunes volume prior to playback and then adjust it to a suitable level.

Play a song from your iPhone, iPod touch or iPad on multiple synced devices (AirPlay 2)

Songs from an iPhone, iPod touch or iPad operating iOS 11.4 or later can be synced with multiple AirPlay 2 supported devices for simultaneous playback.

1 Play the song on your iPhone, iPod touch or iPad.

AirPlay icon is displayed on the iPhone, iPod touch or iPad screen.

2 Tap the AirPlay icon.

Displays a list of devices/speakers that can be played back on the same network.

- A circle is displayed to the right of AirPlay 2 compatible devices.

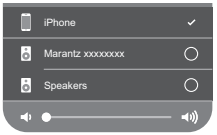

3 Tap the devices/speakers you want to use.

- Multiple AirPlay 2 compatible devices can be selected.
- Volume can be adjusted for each device individually or for all synced devices simultaneously.

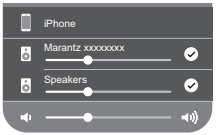

Spotify Connect function

Spotify is the world's most popular streaming service. If you subscribe to Spotify Premium, you can control your new speaker with your phone or tablet. Because Spotify is built-in to your speaker, you can still take calls or use other apps - the music never stops.

For information on how to set up and use Spotify Connect please visit **www.spotify.com/connect**

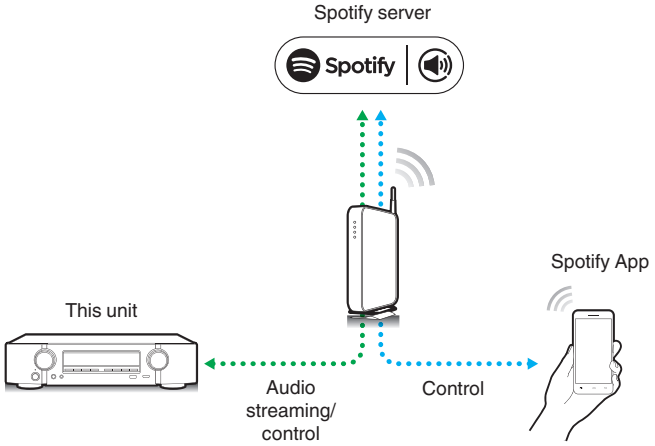

Playing Spotify music with this unit

Download the "Spotify App" onto your Android or iOS device beforehand. To play a Spotify track in this unit, you need to register in the Spotify premium account first.

1 **Connect the Wi-Fi settings of the iOS or Android device in the same network as this unit.**

2 **Launch the Spotify App.**

3 **Play back the Spotify track.**

4 **Tap the Spotify icon to select the unit.**
The music will stream to this unit.

Convenience functions

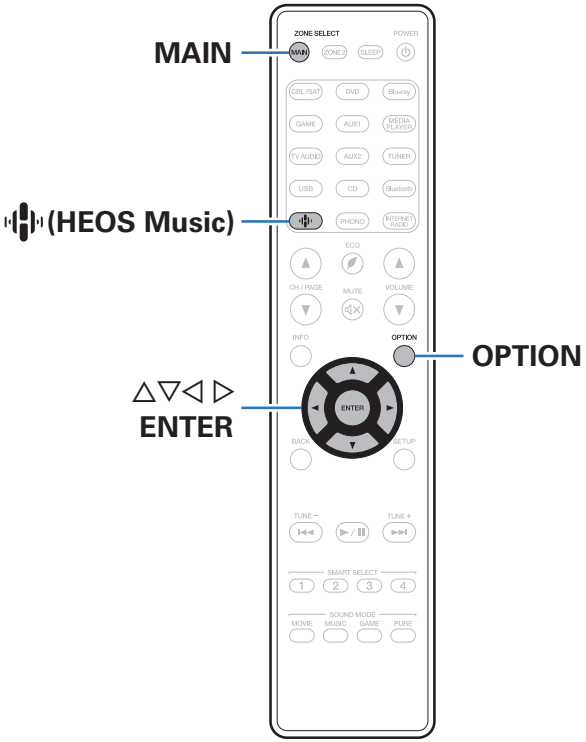

This section explains how to use convenient functions that can be used for each input source.

These functions can only be set in the MAIN ZONE.

Adding to HEOS Favorites

1 **While content is playing, press OPTION.**

The option menu screen is displayed.

2 **Use △▽ to select “Add to HEOS Favorites”, then press ENTER.**

Playing back HEOS Favorites

1 **Press (HEOS Music).**

2 **Use △▽ to select “HEOS Favorites”, then press ENTER.**

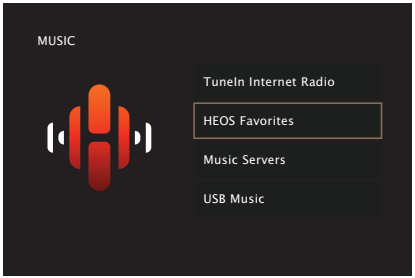

3 **Browse the content and select something to play.**

Deleting a HEOS Favorites

1 While the HEOS Favorites content list is displayed, use △▽ to select the item you want to remove from HEOS Favorites, then press OPTION.

2 Use △▽ to select “Remove from HEOS Favorites”, then press ENTER.

Adjusting the volume of each channel to match the input source (Channel Level Adjust)

The volume of each channel can be changed while listening to music. You can set this for each input source.

1 **Press OPTION.**

An option menu screen is displayed.

- When the input source is “HEOS Music”, an option menu for online music is displayed. Select “AVR Options…”, then press ENTER.

2 **Use △▽ to select “Channel Level Adjust”, then press ENTER.**

The “Channel Level Adjust” screen is displayed.

3 **Use △▽ to select the channel that you wish to adjust.**

4 **Use ◁ ▷ to adjust the volume.**

–12.0 dB – +12.0 dB (Default: 0.0 dB)

5 **Use △▽◁ ▷ to select “Exit”, then press ENTER.**

- Select “Reset” and press ENTER if you want to restore the adjustment values of the various channels to “0.0 dB” (Default).
- Headphone volume can be adjusted when a headphone is connected.
- “Channel Level Adjust” settings are stored for each input source.
- You can only set this for speakers that output audio. In addition, you cannot set this when in the menu “HDMI Audio Out” is set to “TV”. (☞ p. 166)

Adjusting the tone (Tone)

Adjusts the tonal quality of the sound.

1 **Press OPTION.**

An option menu screen is displayed.

- When the input source is “HEOS Music”, an option menu for online music is displayed. Select “AVR Options…”, then press ENTER.

2 **Use △▽ to select “Tone”, then press ENTER.**

The “Tone” screen is displayed.

3 **Use ◁ ▷ to set the tone control function to on/off.**

On:	Allow tone adjustment (bass, treble).
Off (Default)**:**	Playback without tone adjustment.

4 **Select “On” in step 3 and press ▽ to select the sound range to be adjusted.**

Bass:	Adjust bass.
Treble:	Adjust treble.

5 **Use ◁ ▷ to adjust the tone, then press ENTER.**

-6 dB – +6 dB (Default : 0 dB)

- “Tone” settings are stored for each input source.
- This cannot be set when the sound mode is set to “Direct” or “Pure Direct”.
- This item cannot be set when “Dynamic EQ” is set to “On”. (☞ p. 161)
- You cannot set this when no audio signal is input or in the menu “HDMI Audio Out” is set to “TV”. (☞ p. 166)

Displaying your desired video during audio playback (Video Select)

This unit can display video from a different source on TV during audio playback. You can set this for each input source.

❑ Supported input sources: CD* / Tuner / HEOS Music / Phono

* This cannot be set when any of the HDMI, component video or video connectors are assigned.

1 **Press OPTION.**

An option menu screen is displayed.

- When the input source is “HEOS Music”, an option menu for online music is displayed. Select “AVR Options…”, then press ENTER.

2 **Use △▽ to select “Video Select”, then press ENTER.**

The “Video Select” screen is displayed.

3 **Use ◁ ▷ to select the Video Select mode.**

Off (Default)**:**	Disable Video Select mode.
On:	Enable Video Select mode.

4 **If you selected “On” in step 3, press ▽ and select “Source”.**

5 **Use ◁ ▷ to select the input source for video you want to play back, then press ENTER.**

- “Video Select” settings are stored for each input source.

Adjusting the picture quality for your viewing environment (Picture Mode)

❑ **Supported input sources : CBL/SAT / DVD / Blu-ray / Game / AUX1 / AUX2 / Media Player / CD* / TV Audio***

* You can set the picture mode when an HDMI, component video or video connector is assigned and “i/p Scaler” is set to “On”. (☞ p. 172)

1 Press OPTION.

An option menu screen is displayed.

2 Use △▽ to select “Picture Mode”, then press ENTER.

The “Picture Mode” screen is displayed.

3 Use ◁ ▷ to select the picture mode.

Off (Default)**:**	No picture quality adjustment is done with this unit.
Standard:	The standard mode suited for most living room viewing environments.
Movie:	A mode suited for watching movies in a dark room such as a theater room.
Vivid:	A mode that makes graphic images for games, etc. brighter and more vivid.
Streaming:	A mode suited for low bit rate video sources.
ISF Day:	A mode suited for watching movies in a bright room during the day.
ISF Night:	A mode suited for watching movies in a dark room at night.
Custom:	Adjusts the picture quality manually.

4 Press ENTER.

- “Picture Mode” settings are stored for each input source.

Playing the same music in all zones (All Zone Stereo)

You can play back the music being played back in MAIN ZONE simultaneously in ZONE2 (another room).

It is useful when you want to enjoy the same music at the same time in multiple rooms during home party or when you want to play back the same BGM in the entire house.

1 **Press OPTION.**

An option menu screen is displayed.

- When the input source is “HEOS Music”, an option menu for online music is displayed. Select “AVR Options…”, then press ENTER.

2 **Use △▽ to select “All Zone Stereo”, then press ENTER.**

The “All Zone Stereo” screen is displayed.

3 **Select “Start”, then press ENTER.**

The input source for ZONE2 is switched to the same input source as for MAIN ZONE, and playback starts in the All Zone Stereo mode.

■ Stopping the All Zone Stereo mode

1 **During playback in All Zone Stereo mode, press OPTION.**

An option menu screen is displayed.

- When the input source is “HEOS Music”, an option menu for online music is displayed. Select “AVR Options…”, then press ENTER.

2 **Use △▽ to select “All Zone Stereo”, then press ENTER.**

3 **Select “Stop”, then press ENTER.**

- The All Zone Stereo mode is canceled even when the power supply of the MAIN ZONE is turned off.
- In the All Zone Stereo mode, only the “Multi Ch Stereo” and “Stereo” sound modes can be selected.
- When “HDMI Audio Out” is set to “TV”, the All Zone Stereo mode is not available. (☞ p. 166)
- Save the All Zone Stereo mode playback status to the Smart Select function to enable simple playback in All Zone Stereo mode with a single touch.

Selecting a sound mode

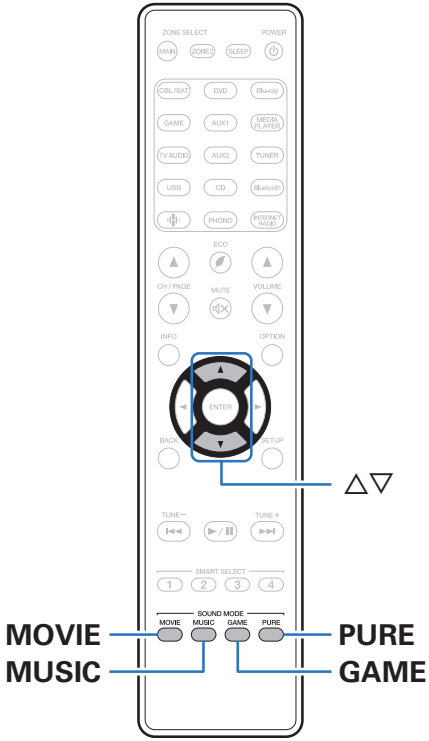

This unit allows you to enjoy various kinds of surround and stereo playback modes.
Disc formats such as Blu-ray Disc and DVD, as well as being supported by digital broadcasting, and even by streaming movies and music from internet-based subscription services.
This unit supports playback of almost all of these multi-channel audio formats. It also supports surround playback of audio formats other than multi-channel audio such as 2-channel stereo audio.

- For audio formats recorded on a disc, see the disc jacket or label.

Selecting a sound mode

1 Press MOVIE, MUSIC or GAME to select a sound mode.

MOVIE :	Switches to the sound mode suitable for enjoying movies and TV programs.
MUSIC :	Switches to the sound mode suitable for enjoying music.
GAME :	Switches to the sound mode suitable for enjoying games.

- The MOVIE, MUSIC, or GAME button memorizes the last sound mode selected for its button. Pressing MOVIE, MUSIC, or GAME recalls the same sound mode as the one selected at the previous playback.
- If the content played back does not support the previously selected sound mode, the most appropriate sound mode for the content is automatically selected.
- You can also press SOUND MODE on the main unit to switch the sound mode.

■ Switching the sound mode

- Press MOVIE, MUSIC or GAME to display a list of the sound modes that can be selected. Each time you press MOVIE, MUSIC or GAME, the sound mode changes.
- While the list is displayed, you can also use △▽ to select a sound mode.
- Try out various sound modes and enjoy sound mode in your favorite mode.

- Please set the surround mode to Dolby Atmos/Surround when playing back Dolby Atmos encoded content. Dolby Atmos/Surround delivers the optimum playback experience from Blu-ray and streaming sources encoded with Dolby Atmos as well as channel based content. The default setting of this receiver is Dolby Atmos/Surround.

【Example】 When MOVIE is pressed

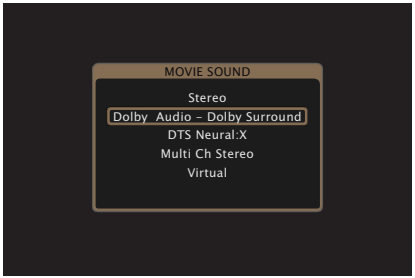

Direct playback

Sound recorded in source is played as is.

1 **Press PURE to select “Direct”.**

Direct playback begins.

- This can also be set by pressing PURE DIRECT on the main unit.

Pure Direct playback

This mode is for playback with higher sound quality than in Direct playback mode.

This mode turns off the main unit display and analog video circuit. Doing so suppresses noise sources that affect sound quality.

1 **Press PURE to select “Pure Direct”.**

The display goes dark, and Pure Direct playback begins.

The PURE DIRECT indicator lights.

- In Direct and Pure Direct sound modes, the following items cannot be adjusted.
  - Tone (☞ p. 115)
  - M-DAX (☞ p. 157)
  - MultEQ® (☞ p. 160)
  - Dynamic EQ (☞ p. 161)
  - Dynamic Volume (☞ p. 162)
  - Graphic EQ (☞ p. 162)
- This can also be set by pressing PURE DIRECT on the main unit.

NOTE

- Video signals are only output when HDMI signals are played in the Pure Direct mode.
- When the Pure Direct mode has been selected, the display turns off after about 5 seconds.

Auto surround playback

This mode detects the type of input digital signal, and automatically selects the corresponding mode for playback.
Perform stereo playback when the input signal is PCM. When the input signal is Dolby Digital or DTS, the music is played back according to the respective channel number.

1 **Press PURE to select “Auto”.**

Auto surround playback begins.

- This can also be set by pressing PURE DIRECT on the main unit.

Description of sound mode types

Dolby sound mode

Sound mode type	Description
Dolby Atmos	Please select this mode to play content encoded with Dolby Atmos. If you have selected a different sound mode previously, please select again this mode for Dolby Atmos content play back. It decodes Dolby Atmos content and its positioning data in real time and outputs audio from the appropriate speakers, creating natural audio images regardless of the speaker layout. Use ceiling speakers and/or Dolby Atmos Enabled speakers to realize a three-dimensional sound field. An immersive audio experience can be enjoyed from traditional speaker layouts that do not employ overhead or Dolby Atmos Enabled Speakers by selecting the Speaker Virtualizer feature*.
Dolby TrueHD	Please select this mode to play back the contents encoded with Dolby TrueHD at 192kHz/96kHz.
Dolby Digital Plus	Please select this mode to play back the contents encoded with Dolby Digital Plus.
Dolby Digital	Please select this mode to play back the contents encoded with Dolby Digital.
Dolby Surround	This mode uses Dolby Surround Upmixer to extend various sources to natural and realistic multi channels for playback. Use ceiling speakers such as top middle speakers to realize a three-dimensional sound field.

* The Speaker Virtualizer feature will be supported via firmware update.

DTS sound mode

Sound mode type	Description
DTS Surround	This mode can be selected when playing sources recorded in DTS.
DTS ES Dscrt6.1*1	This mode is suitable for playing discs recorded in DTS-ES. The surround back channel added using the discrete method is played as an independent channel. Since all channels are independent, the 360-degree spacial expressiveness and sound localization are enhanced.
DTS ES Mtrx6.1*1	This mode is suitable for playing discs recorded in DTS-ES. The surround back channel added to the surround-left and surround-right channels by a matrix encoder at software recording time is decoded by this unit's matrix decoder and played from each channel (surround left, surround right, surround back).
DTS 96/24	This mode can be selected when playing sources recorded in DTS 96/24.
DTS-HD	This mode can be selected when playing sources recorded in DTS-HD.
DTS Express	This mode can be selected when playing sources recorded in DTS Express.
DTS:X	This mode can be selected when playing back content encoded with DTS:X. It decodes DTS:X content and its positioning data in real time and outputs audio from the appropriate speakers, creating natural audio images regardless of the speaker layout. Use height speakers to realize a three-dimensional sound field.
DTS Neural:X*2	This mode uses DTS Neural:X Upmixer to extend various sources to natural and realistic multi channels for playback. Use height speakers such as front height speakers to realize a three-dimensional sound field.
DTS Virtual:X*2*3	This mode uses DTS Virtual:X with virtual height and virtual surround processing to realize a three-dimensional sound field when the height speakers are not used.

*1 This can be selected when "Speaker Config." - "Surr. Back" is not set to "None". (☞ p. 194)

*2 It cannot be selected when the input signal is Dolby Digital, Dolby Digital Plus, Dolby TrueHD or Dolby Atmos.

*3 This can be selected when Height, Ceiling and Dolby Atmos Enabled speakers are not being used.

PCM multi-channel sound mode

Sound mode type	Description
Multi Ch In	This mode can be selected when playing multi-channel PCM sources.

Original sound mode

Sound mode type	Description
Multi Ch Stereo	This mode is for enjoying stereo sound from all speakers.
Virtual	This mode lets you experience an expansive surround sound effect when playing back through just the front (L/R) speakers only, and when listening with stereo headphones.

Auto sound mode

Sound mode type	Description
Auto	In this mode, the type of digital signal input, such as Dolby Digital, Dolby TrueHD, Dolby Digital Plus, Dolby Digital EX, Dolby Atmos, DTS, DTS-HD, DTS:X, DTS-ES, PCM (multi-channel) is detected, and the playback mode switches automatically to the corresponding mode. If the input signal is analog or PCM (2-channel), stereo playback is used. For Dolby Digital or DTS, the music is played back according to the respective channel number.

Stereo sound mode

Sound mode type	Description
Stereo	This mode plays 2-channel stereo audio with no additional surround sound processing. • Sound is output from the front left and right speakers, and subwoofer if connected. • When multi-channel signals are inputted, they are mixed down to 2-channel audio and are played back with no additional surround sound processing.

Direct sound mode

Sound mode type	Description
Direct	This mode plays back audio as recorded in the source.
Pure Direct	This mode plays back an even higher quality sound than the “Direct” mode. The following circuits are stopped in order to further improve sound quality. • Display indicator circuit of the main body (display will go off.) • The analog video input/output switcher and processor is disabled.

Sound mode that can be selected for each input signal

- The following sound modes can be selected using the MOVIE, MUSIC and GAME buttons.
- Adjust the sound field effect with the menu “Surround Parameter” to enjoy surround sound the way you like it. (☞ p. 154)

Input signal	Sound mode	MOVIE button	MUSIC button	GAME button
2-channel ∗1	Stereo	○	○	○
	Dolby Surround ∗2	○	○	○
	DTS Neural:X ∗2∗3	○	○	○
	DTS Virtual:X ∗3∗4	○	○	○
	Multi Ch Stereo ∗5	○	○	○
	Virtual	○	○	○

∗1 2-channel also includes analog input.
∗2 This mode plays back 2-channel sources in 5.1 or 7.1-channel playback. It cannot be selected when headphones are used or when the speaker configuration is front speakers only.
∗3 It cannot be selected when the input signal is Dolby Digital, Dolby Digital Plus, Dolby TrueHD or Dolby Atmos.
∗4 It cannot be selected when headphones are used, or when a speaker configuration with any height speakers is used.
∗5 This cannot be selected when headphones are used.

Input signal		Sound mode	MOVIE button	MUSIC button	GAME button
Multi-channel ∗6		Stereo	○	○	○
	Dolby Digital	Dolby Digital ∗5	○	○	○
		Dolby Digital + Dolby Surround ∗5	○	○	○
	Dolby Digital Plus	Dolby Digital Plus ∗5	○	○	○
		Dolby Digital Plus + Dolby Surround ∗5∗7	○	○	○
		Dolby Atmos ∗5∗8	○	○	○
	Dolby TrueHD	Dolby TrueHD ∗5	○	○	○
		Dolby TrueHD + Dolby Surround ∗5∗7	○	○	○
		Dolby Atmos ∗5∗8	○	○	○
	Dolby Atmos	Dolby Atmos ∗5	○	○	○
	DTS	DTS Surround ∗5	○	○	○
		DTS ES Dscrt 6.1 ∗5	○	○	○
		DTS ES Mtrx 6.1 ∗5	○	○	○
		DTS 96/24 ∗5	○	○	○
		DTS + Dolby Surround ∗5	○	○	○
		DTS + Neural:X ∗5	○	○	○
		DTS + Virtual:X ∗4	○	○	○

∗4 It cannot be selected when headphones are used, or when a speaker configuration with any height speakers is used.
∗5 This cannot be selected when headphones are used.
∗6 The sound mode that can be selected differs depending on the audio format of the input signal and the number of channels. For details, see “Types of input signals, and corresponding sound modes” (☞ p. 263).
∗7 This can be selected when the input signal does not contain Dolby Atmos.
∗8 This can be selected when the input signal contains Dolby Atmos.

Input signal		Sound mode	MOVIE button	MUSIC button	GAME button
	DTS-HD / DTS Express	DTS-HD HI RES ∗5	○	○	○
		DTS-HD MSTR ∗5	○	○	○
		DTS Express ∗5	○	○	○
		DTS-HD + Dolby Surround ∗5	○	○	○
		DTS-HD + Neural:X ∗5	○	○	○
		DTS-HD + Virtual:X ∗4	○	○	○
	DTS:X	DTS:X ∗5	○	○	○
		DTS:X MSTR ∗5	○	○	○
		DTS:X + Virtual:X ∗4	○	○	○
	PCM multi-channel	Multi Ch In ∗5	○	○	○
		Multi Ch In 7.1 ∗5	○	○	○
		Multi In + Dolby Surround ∗5	○	○	○
		Multi Ch In + Neural:X ∗5	○	○	○
		Multi In + Virtual:X ∗4	○	○	○
Multi-channel ∗6		Multi Ch Stereo ∗5	○	○	○
		Virtual	○	○	○

∗4 It cannot be selected when headphones are used, or when a speaker configuration with any height speakers is used.

∗5 This cannot be selected when headphones are used.

∗6 The sound mode that can be selected differs depending on the audio format of the input signal and the number of channels. For details, see “Types of input signals, and corresponding sound modes” (☞ p. 263).

- Only “Stereo” and “Virtual” can be selected when headphones are used.

■ Views on the display

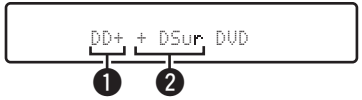

❶ Shows a decoder to be used.

- In the case of the Dolby Digital Plus decoder, "DD+" is displayed.

❷ Shows a decoder that creates sound output.

- "DSur" indicates that the Dolby Surround decoder is being used.

HDMI Control function

A recent addition to the HDMI standard is CEC (Consumer Electronics Control), which allows control signals from one device to communicate with another device via the HDMI cable connection.

Setting procedure

1 **Enable the HDMI Control function of this unit.**

Set “HDMI Control” to “On”. (☞ p. 168)

2 **Turn the power on for all the devices connected by HDMI cable.**

3 **Set the HDMI Control function for all devices connected by HDMI cable.**

- Please consult the operating instructions for the connected devices to check the settings.
- Carry out steps 2 and 3 should any of the devices be unplugged.

4 **Switch the television input to the HDMI input connected to this unit.**

5 **Switch the input source of this unit to check that video from the player connected by HDMI is played back correctly.**

6 **When you turn the TV’s power to standby, check that the power of this unit also goes to standby.**

NOTE

- Some functions may not operate depending on the connected TV or player. Check the owner’s manual of each device for details beforehand.

Smart Menu function

This function can be used to configure the settings of this unit, select an input source and set Tuner and Internet Radio stations using the TV remote control.

1 Enable the HDMI Control function of this unit and the TV. (☞ p. 168)

2 Set “Smart Menu” to “On” on this unit. (☞ p. 170)

3 Select “AV Receiver” in a TV menu such as “Input”∗ or “Operate Connected HDMI Device”∗.

The Smart Menu of this unit is displayed on the TV.

- This unit can be operated with the TV remote control while the Smart Menu is displayed.

∗ The selection method differs depending on your TV.

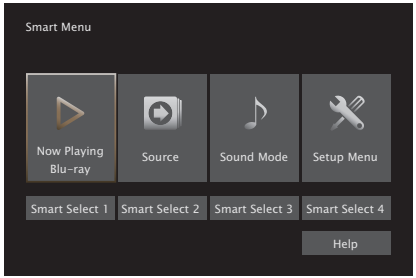

■ Now Playing

Enjoy content from the input source currently selected on this unit.

■ Source

Switch the input of this unit.

If you select “HEOS Music” or “Tuner”, you can continue to operate this unit using the TV remote control.

■ Sound Mode

Change the sound mode of this unit.

You can select from the following three sound modes.

Surround:	Surround sound playback according to the input signal.
Stereo:	Stereo playback.
Multi Ch Stereo:	Multi-channel stereo playback.

Setup Menu

Displays a setup menu for configuring the settings of this unit.

Smart Select

Calls up the “Smart Select” items registered to this unit.

NOTE

- If the “HDMI Control” or “Smart Menu” settings have been changed, always reset the power to connected devices after the change.
- The Smart Menu function may not work properly depending on the specifications of your TV. In this case, set “Smart Menu” to “Off”. (☞ p. 170)

Sleep timer function

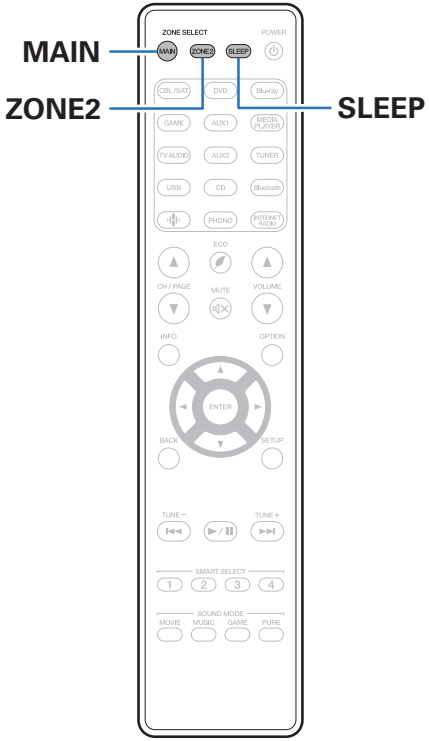

You can have the power automatically switched to standby once a set time has elapsed. This is convenient for viewing and listening while going to sleep. The sleep timer function can be set for each zone.

Using the sleep timer

1 **Press MAIN or ZONE2 to select the operating zone with the remote control.**

The button for the selected zone is lit.

2 **Press SLEEP and display the time you want to set.**

- The SLEEP indicator lights up on the display and the sleep timer starts.
- You can set the sleep timer in the range from 10 to 120 minutes in steps of 10 minutes.

■ Checking the remaining time

Press SLEEP when the sleep timer is in operation.

The remaining time appears on the display.

■ To cancel the sleep timer

Press SLEEP to select “Off”.

The SLEEP indicator on the display turns off.

- The sleep timer setting is canceled when the unit switches to standby mode.

NOTE

- The sleep timer function cannot turn off the power of devices connected to this unit. To turn off the power of those connected devices, set up sleep timers on the connected devices themselves.

Smart select function

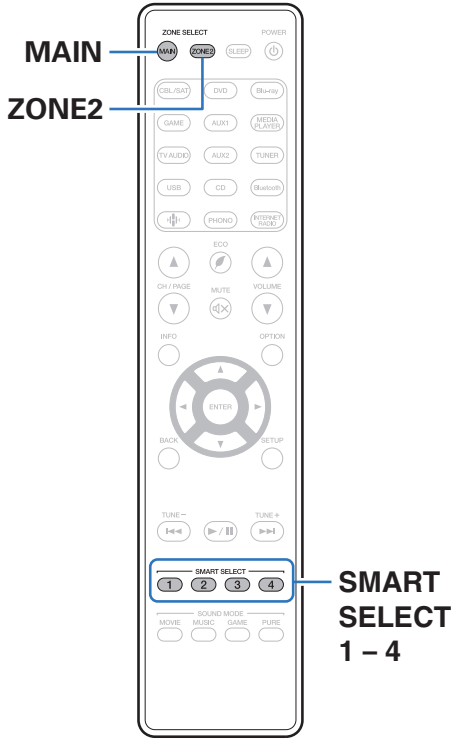

Settings such as the input source, volume level and sound mode can be registered to the SMART SELECT 1 - 4 buttons.

You can simply press one of the registered SMART SELECT buttons in subsequent playbacks to switch to the group of saved settings in a batch.

By saving frequently used settings at the SMART SELECT 1 – 4 buttons, you will always be able to easily call up the same playback environment.

The Smart Select function can be memorized for each zone.

Calling up the settings

1 Press MAIN or ZONE2 to select the operating zone with the remote control.

The button for the selected zone is lit.

2 Press SMART SELECT.

The Smart Select settings registered to the button you pressed are called up.

- The default settings for the input source are as shown below.

【MAIN ZONE】

Button	Input source
SMART SELECT 1	CBL/SAT
SMART SELECT 2	Blu-ray
SMART SELECT 3	Media Player
SMART SELECT 4	HEOS Music

【ZONE2】

Button	Input source
SMART SELECT 1	CBL/SAT
SMART SELECT 2	–
SMART SELECT 3	–
SMART SELECT 4	HEOS Music

- Volume is not registered to Smart Select in the factory default settings. See “Changing the settings” to register volume to Smart Select. (☞ p. 138)

Changing the settings

1 Set the items below to the settings you want to register.

The following settings from ① to ⑨ can be memorized for MAIN ZONE, and settings ① and ② can be memorized for ZONE2.

① Input source (☞ p. 71)
② Volume (☞ p. 72)
③ Sound mode (☞ p. 119)
④ Audyssey (Audyssey MultEQ®, Audyssey Dynamic EQ®, Audyssey Dynamic Volume®) (☞ p. 160)
⑤ " M-DAX " (☞ p. 157)
⑥ "Adjusting the volume of each channel to match the input source (Channel Level Adjust)" (☞ p. 114)
⑦ "Displaying your desired video during audio playback (Video Select)" (☞ p. 116)
⑧ "Adjusting the picture quality for your viewing environment (Picture Mode)" (☞ p. 117)
⑨ "All Zone Stereo" (☞ p. 118)

- Press and hold SMART SELECT while a radio station is being received is being played back with any of the following sources, the current radio station is memorized.
  - Tuner / Internet Radio Station

2 Press MAIN or ZONE2 to select the operating zone with the remote control.

The button for the selected zone is lit.

3 Press and hold the desired SMART SELECT until "Smart∗ Memory" or "Z2 Smart∗ Memory" appear on the display.

The current settings will be memorized.
∗ is displayed the number for the SMART SELECT button you pressed.

■ Changing the Smart Select Name

The MAIN ZONE Smart Select name displayed on the TV screen or display of this unit can be changed to a different name.
For the name change method, see "Smart Select Names" (☞ p. 215).

Panel lock function

To prevent accidental operation of this unit, you can disable operation of the buttons on the front panel.

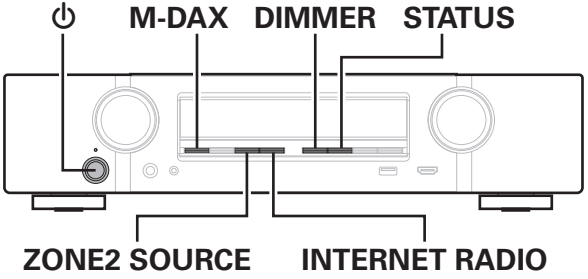

Disabling all key button operations

1. **Press ⏻ while you press and hold M-DAX and DIMMER with the unit in standby mode.**
2. **Use ZONE2 SOURCE or INTERNET RADIO to select “FP/VOL LOCK On”.**
3. **Press STATUS to enter the setting.**
   All button operations except ⏻ are disabled.

Disabling all button operations except VOLUME

1. **Press ⏻ while you press and hold M-DAX and DIMMER with the unit in standby mode.**
2. **Use ZONE2 SOURCE or INTERNET RADIO to select “FP LOCK On”.**
3. **Press STATUS to enter the setting.**
   All button operations except ⏻ and VOLUME are disabled.

Canceling the Panel lock function

1 **Press ⏻ while you press and hold M-DAX and DIMMER with the unit in standby mode.**

2 **Press ZONE2 SOURCE or INTERNET RADIO to select "FP LOCK ∗Off".**

(∗ The currently set mode.)

3 **Press STATUS to enter the setting.**

The Panel lock function is canceled.

- Even when the Panel lock function is set, you can operate the unit using the remote control unit.

Remote lock function

When connecting an IR receiver, enable the Remote lock function. When the function is enabled, you can not perform operations with the remote control unit.

By default, this function is disabled.

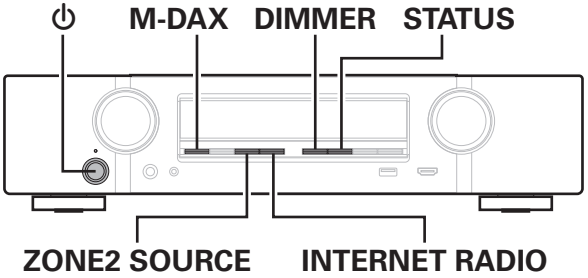

Disabling the sensor function of the remote control unit

1. **Press ⏻ while you press and hold M-DAX and DIMMER with the unit in standby mode.**
2. **Use ZONE2 SOURCE or INTERNET RADIO to select “RC LOCK On”.**
3. **Press STATUS to enter the setting.**

   The infrared light receiving function is disabled.

Enabling the remote sensor function

1. **Press ⏻ while you press and hold M-DAX and DIMMER with the unit in standby mode.**
2. **Press ZONE2 SOURCE or INTERNET RADIO to select “RC LOCK ∗Off”.**

   (∗ The currently set mode.)
3. **Press STATUS to enter the setting.**

   Infrared light receiving function on the main unit is enabled.

Web control function

You can control this unit from a web control screen on a web browser.

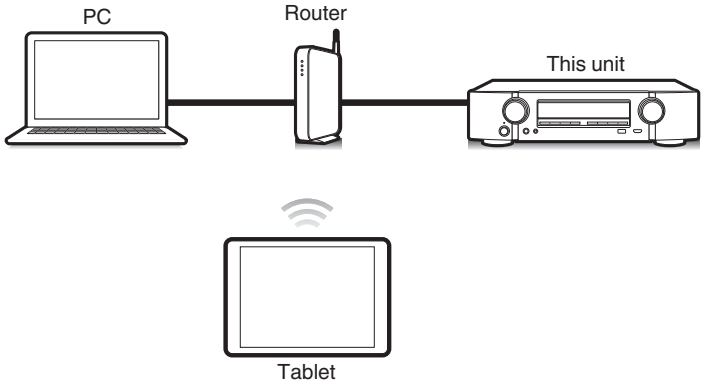

- This unit and the PC or tablet need to be connected correctly to the network in order to use the web control function. (☞ p. 65)
- Depending on the settings of your security-related software, you may not be able to access this unit from your PC. If this is the case, then change the settings of the security-related software.

Controlling the unit from a web control

1 **Switch the “Network Control” setting to “Always On”. (☞ p. 207)**

2 **Check the IP address of this unit with “Information”. (☞ p. 202)**

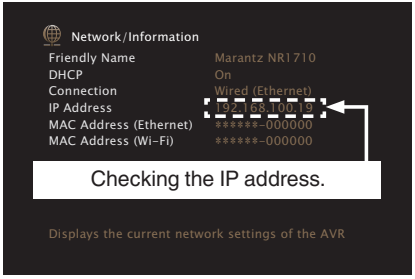

3 **Start up the web browser.**

4 **Enter the IP address of this unit in browser's address box.**

For example, if the IP address of this unit is "192.168.100.19", enter "http://192.168.100.19".

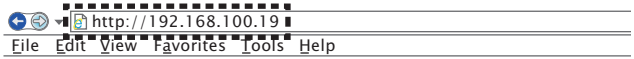

5 **When the top menu is displayed on the web browser, click on the menu item you want to operate.**

Playback in ZONE2 (Another room)

You can operate this unit to enjoy audio in a room (ZONE2) that is different from the room where this unit is placed (MAIN ZONE).
You can simultaneously play back the same source in both the MAIN ZONE and ZONE2. You can also play back separate sources in the MAIN ZONE and ZONE2.
If the input for ZONE2 is set to “Source”, both digital and analog connected devices can be listened to from ZONE2.
If the input for ZONE2 is set to a specific source (like CBL/SAT), only connected analog devices can be listened to from ZONE2.

Connecting ZONE2

You can use the following two methods to play back audio in ZONE2.

- “Connecting using a speaker output terminal” (☞ p. 144)
- “Connecting using an external amplifier” (☞ p. 145)

■ Connection 1: Connecting using a speaker output terminal

When “Assign Mode” is set to “ZONE2” in the menu, ZONE2 audio is output from the SURROUND BACK speaker terminal. (☞ p. 191)

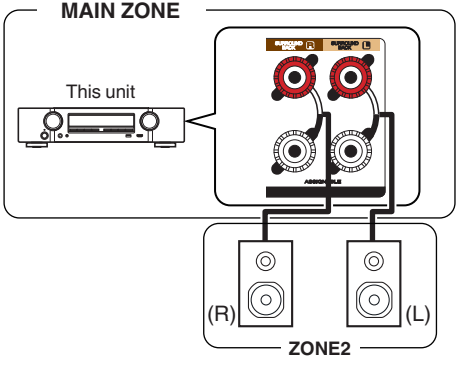

■ Connection 2 : Connection using an external amplifier (ZONE2)

The audio signals of this unit's ZONE2 audio output connectors are output to the ZONE2 amplifiers and played on these amplifiers.

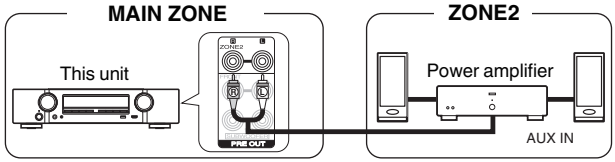

Playback in ZONE2

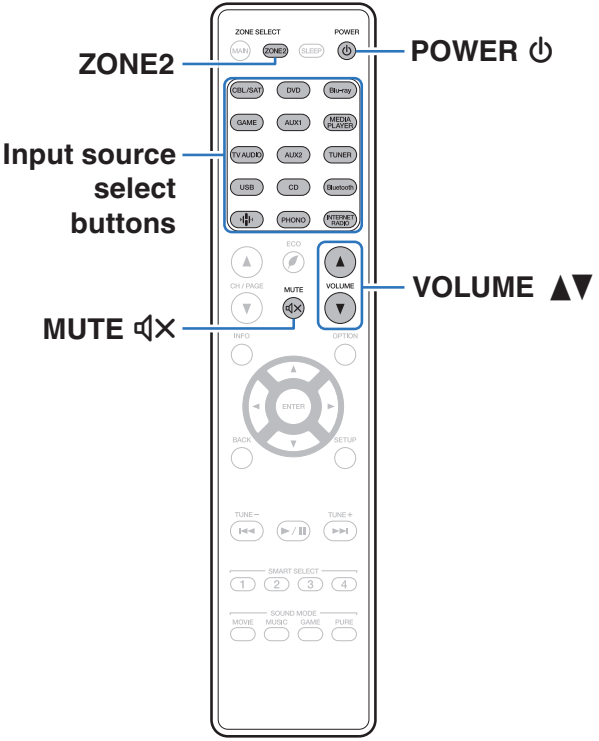

1 **Press ZONE2 to set the operating zone to ZONE2 with the remote control.**

The ZONE2 button lights.

2 **Press POWER to turn on the ZONE2 power.**

The Z2 indicator on the display lights.

- Power in ZONE2 can be turned on or off by pressing ZONE2 ON/OFF on the main unit.

3 **Press the input source select button to select the input source to be played.**

The audio signal of the selected source is output to ZONE2.

- You can also select ZONE2 as the input source by pressing ZONE2 SOURCE and then turning the INPUT SELECTOR.

- Setting the input source of ZONE2 as the “Source” allows you to play the same content in MAIN ZONE and in ZONE2, regardless of the type of input signal.
  - Set the input source of ZONE2 as the “Source” by pressing the ZONE2 SOURCE button on the main unit.
  - If the MAIN ZONE input source is changed while ZONE2 is selected as the "Source", then ZONE2's input source will be changed to mirror the MAIN ZONE's input source.

■ Adjusting the volume (ZONE2)

Use VOLUME ▲▼ to adjust the volume.

- At time of purchase, “Volume Limit” is set to “70 (–10 dB)”. (☞ p. 214)

- Turn VOLUME after pressing ZONE2 SOURCE on the main unit to adjust the volume.

■ Turning off the sound temporarily (Muting) (ZONE2)

Press MUTE 🔇.

The sound is reduced to the level set at “Mute Level” in the menu. (☞ p. 215)

- To cancel mute, either adjust the sound volume or press MUTE 🔇 again.

Menu map

When using menu operations, connect this unit to a TV and operate this unit while viewing the TV.
The recommended settings are configured for this unit by default. You can customize this unit based on your existing system and your preferences.

Setting items	Detailed items	Description	Page
Audio	**Center Level Adjust**	Adjusts the center channel volume to clarify the dialog for all sources.	153
	Subwoofer Level Adjust	Adjusts the subwoofer channel volume for all input sources.	153
	Surround Parameter	Adjusts surround sound parameters.	154
	M-DAX	Expands the low and high frequency components of compressed audio content such as MP3 files to enable richer audio playback.	157
	Audio Delay	Compensates for incorrect timing between video and audio.	158
	Volume	Sets the MAIN ZONE (room where the unit is located) volume setting.	159
	Audyssey	Makes Audyssey MultEQ®, Audyssey Dynamic EQ® and Audyssey Dynamic Volume® settings.	160
	Graphic EQ	Uses the graphic equalizer to adjust the tone of each speaker.	162
Video	**Picture Adjust**	Adjusts picture quality.	164
	HDMI Setup	Makes settings for HDMI Audio Out, HDMI Pass Through and HDMI Control settings.	166
	Output Settings	Makes settings for video output.	171
	On Screen Display	Configures the on-screen display settings.	173
	4K Signal Format	Set the 4K signal format when the TV or playback device is 4K compatible.	174
	TV Format	Sets the video signal format to be output for the TV you are using.	176

Setting items	Detailed items	Description	Page
Inputs	**Input Assign**	Changes input connector assignment and the audio input mode.	177
	Source Rename	Changes the display name for input source.	180
	Hide Sources	Removes from the display input sources that are not used.	180
	Source Level	Adjusts the playback level of the audio input.	180
Speakers	**Audyssey® Setup**	The acoustic characteristics of the connected speakers and listening room are measured and the optimum settings are made automatically.	181
	Manual Setup	Sets up the speakers manually or changes Audyssey® Setup settings.	191
Network	**Information**	Displays network information.	202
	Connection	Selects whether to connect the home network to a wireless LAN or a wired LAN.	202
	Settings	Used for manually setting the IP address.	205
	Network Control	Enables network communication in standby power mode.	207
	Friendly Name	The “Friendly Name” is the name of this unit displayed on the network. You can change the Friendly Name according to your preferences.	207
	Diagnostics	Used to check the network connection.	208
	AirPlay	Settings for Apple AirPlay.	208

Setting items	Detailed items	Description	Page
HEOS Account	【When the user is signed out the HEOS Account】		
	I have a HEOS Account	Selects to sign in.	209
	Create Account	Creates new HEOS Account.	209
	Forgot Password	If you forgot your password, we'll send you an email with instructions about how to reset it.	209
	【When the user is signed in the HEOS Account】		
	Signed in As	Displays your HEOS Account.	209
	Change Location	Selects your location.	209
	Change Password	Changes your HEOS Account Password.	209
	Delete Account	Deletes your HEOS Account.	209
	Sign Out	Sign out of your HEOS Account.	209

Setting items	Detailed items	Description	Page
General	**Language**	Changes the language of the display on the TV screen.	210
	ECO	Configures the ECO Mode and Auto Standby energy-saving functions.	210
	ZONE2 Setup	Makes settings for audio playback with ZONE2.	214
	Zone Rename	Changes the display title of each zone to one you prefer.	215
	Smart Select Names	Changes the Smart Select Name display title to one you prefer.	215
	Trigger Out	Select the conditions for activating trigger out function.	216
	Front Display	Makes settings related to the display on this unit.	216
	Firmware	Checks for the latest firmware information about updates and upgrades, updates the firmware, and sets up the notification message display.	217
	Information	Shows information about this unit settings, input signals, etc.	220
	Usage Data	Selects whether or not to send anonymous usage data to Marantz.	221
	Save & Load	Save and restore device settings by using a USB memory device.	222
	Setup Lock	Protects settings from inadvertent changes.	222
	Reset	Various settings are reset to the factory default values.	223
Setup Assistant	**Begin Setup...**	Performs basic installation/connections/settings from the beginning according to the guidance indicated on the TV screen.	Page 9 of the separate manual “Quick Start Guide”
	Language Select	Sets individual setting items according to the guidance displayed on the TV screen.	
	Speaker Setup		
	Speaker Calibration		
	Network Setup		
	TV Audio Connection		
	Input Setup		
	Mobile Apps		

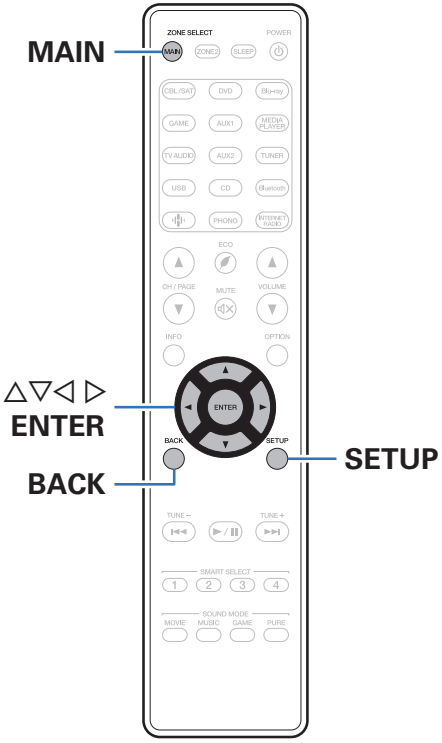

Menu operations

1 **Press MAIN on the remote control unit to set the operating zone to the MAIN ZONE.**
The MAIN button lights.

2 **Press SETUP.**
The menu is displayed on the TV screen.

3 **Use △▽ ▷ to select the menu to be set or operated, then press ENTER.**

4 **Use ◁ ▷ to change to desired setting.**

5 **Press ENTER to enter the setting.**

- To return to the previous item, press BACK.
- Exiting the menu, press SETUP while the menu is displayed. The menu display disappears.

Audio

Make audio-related settings.

Center Level Adjust

Adjusts the center channel volume to clarify the dialog for all sources.

■ Center

Adjusts the volume output from the center channel.

–12.0 dB – +12.0 dB (Default: 0.0 dB)

- This setting is also reflected in the center channel level in the “Speakers” - “Levels” menu settings. (☞ p. 198)

Subwoofer Level Adjust

Adjusts the subwoofer channel volume for all input sources.

■ Subwoofer

Adjusts the volume level for the subwoofer.

–12.0 dB – +12.0 dB (Default: 0.0 dB)

- This setting is also reflected in the subwoofer channel level in the “Speakers” - “Levels” menu settings. (☞ p. 198)

Surround Parameter

You can adjust the surround audio sound field effects to match your preferences.
The items (parameters) that can be adjusted depend on the signal being input and the currently set sound mode. For details on the adjustable parameters, see “Sound modes and surround parameters” (☞ p. 260).

- Some setting items cannot be set while playback is stopped. Make the settings during playback.
- “Surround Parameter” settings are stored for each sound mode.

Cinema EQ

Gently softens the upper treble range of movie soundtracks to reduce possible harshness and improve clarity.

On:	“Cinema EQ” is used.
Off (Default)**:**	“Cinema EQ” is not used.

Loudness Management

This sets whether to output as specified in “Dynamic Compression” or output directly without compressing the dynamic range of audio recorded in the disc.

On (Default)**:**	Outputs are given based on enabling the settings made in “Dynamic Compression” and Dialogue normalization function.
Off:	“Dynamic Compression” settings and Dialogue normalization are disabled, and the signals on the disc are output as is.

- “Loudness Management” can be set when Dolby Digital, Dolby Digital Plus, Dolby TrueHD and Dolby Atmos signal is input.

Dynamic Compression

Compress dynamic range (difference between loud and soft sounds).

Auto:	Automatic dynamic range compression on/off control according to source.
Low / Medium / High:	These set the compression level.
Off:	Dynamic range compression is always off.

- "Dynamic Compression" can be set when Dolby Digital, Dolby Digital Plus, Dolby TrueHD, Dolby Atmos or DTS signal is input.
- The default setting is "Off". When the input signal is the Dolby TrueHD or Dolby Atmos source, the default setting is "Auto".
- "Auto" cannot be set when inputting a DTS signal.

Dialog Control

Adjust the volume of dialog in movies, vocals in music, etc. so these can be heard more easily.

0 – 6 (Default : 0)

- This can be set when a DTS:X signal that is compatible with the Dialog Control function is input.

Low Frequency Effects

Adjust the low frequency effects level (LFE).

-10 dB – 0 dB (Default: 0 dB)

- For proper playback of the different sources, we recommend setting to the values below.
  - Dolby Digital sources: 0 dB
  - DTS movie sources: 0 dB
  - DTS music sources: -10 dB

Speaker Virtualizer

The Speaker Virtualizer enhances the surround and height speaker channels to create an enveloping virtual surround effect.

On (Default)**:**	Enables “Speaker Virtualizer”.
Off:	Disables “Speaker Virtualizer”.

- You can set this when the sound mode is “Dolby Atmos”, “Dolby Surround” or sound mode that has “+Dolby Surround” in the sound mode name.
- Usable when not using height, ceiling or “Dolby Atmos Enabled” speakers, or when not using surround speakers.
- This feature will be supported via firmware update.

DTS Neural:X

DTS Neural:X Expands the non-object based audio signals and optimizes them for your speaker configuration.

On (Default)**:**	Use “DTS Neural:X”.
Off:	Do not use “DTS Neural:X”.

- You can set this when sound mode is “DTS:X” or “DTS:X MSTR”.

Subwoofer

Turn subwoofer output on and off.

On (Default)**:**	The subwoofer is used.
Off:	The subwoofer is not used.

- You can set this when the sound mode is “Direct” or “Stereo” and in the menu “Subwoofer Mode” is set to “LFE+Main”. (☞ p. 200)

Set Defaults

The “Surround Parameter” settings are returned to the default settings.

M-DAX

Compressed audio formats such as MP3, WMA (Windows Media Audio) and MPEG-4 AAC reduce the amount of data by eliminating signal components that are hard for the human ear to hear. The “M-DAX” function generates the signals eliminated upon compression, restoring the sound to conditions near those of the original sound before compression. It also restores the original bass characteristics for a rich and expanded tonal range.

■ Mode

High:	Optimized mode for compressed sources with very weak highs (64 kbps and under).
Medium:	Apply suitable bass and treble boost for all compressed sources (96 kbps and under).
Low:	Optimized mode for compressed sources with normal highs (96 kbps and over).
Off:	Do not use “M-DAX”.

- The M-DAX indicator lights.
- This item can be set with analog signals or PCM signal (Sample Rate = 44.1/48 kHz) is input.
- This item default setting for “HEOS Music” is “Low”. All others are set to “Off”.
- This cannot be set when the sound mode is set to “Direct” or “Pure Direct”.
- “M-DAX” settings are stored for each input source.
- This can also be set by pressing M-DAX on the main unit.

Audio Delay

Compensates for incorrect timing between video and audio.

- “Audio Delay” settings are stored for each input source.

Auto Lip Sync

Automatically adjusts the audio processing time to compensate for delays in audio/video timing from TV compatible with Auto Lip Sync.

On (Default)**:**	Correct automatically.
Off:	Do not correct automatically.

- Automatic correction may not be performed depending on the specifications of your TV even when “Auto Lip Sync” is set to “On”.

Adjust

The timing mismatch between the picture and sound needs to be corrected manually.

0 ms – 500 ms (Default : 0 ms)

- You can also finely adjust the delay correction value set by “Auto Lip Sync”.
- Adjust for game mode can be set when “Video Mode” is set to “Auto” or “Game”. (☞ p. 171)

Volume

Set the MAIN ZONE (room where the unit is located) volume setting.

■ Scale

Set how volume is displayed.

0 - 98 (Default)**:**	Display in the range 0 (Min) to 98.
-79.5 dB - 18.0 dB:	Display ---dB (Min), in the range –79.5 dB to 18.0 dB.

- "Scale" settings are reflected in all the zones.

■ Limit

Make a setting for maximum volume.

60 (–20 dB) / 70 (–10 dB) / 80 (0 dB)
Off (Default)

- The dB value is displayed when the "Scale" setting is "-79.5 dB - 18.0 dB". (☞ p. 159)

■ Power On Level

Define the volume setting that is active when the power is turned on.

Last (Default)**:**	Use the memorized setting from the last session.
Mute:	Always use the muting on condition when power is turned on.
1 – 98 (–79 dB – 18 dB) :	The volume is adjusted to the set level.

- The dB value is displayed when the "Scale" setting is "-79.5 dB - 18.0 dB". (☞ p. 159)

■ Mute Level

Set the amount of attenuation when muting is on.

Full (Default)**:**	The sound is muted entirely.
–40 dB :	The sound is attenuated by 40 dB down.
–20 dB :	The sound is attenuated by 20 dB down.

Audyssey®

Set Audyssey MultEQ®, Audyssey Dynamic EQ® and Audyssey Dynamic Volume®. These can be selected after Audyssey® Setup has been performed.

For additional information on Audyssey technology, please see “Explanation of terms” (☞ p. 266).

- “MultEQ®”, “Dynamic EQ”, “Reference Level Offset” and “Dynamic Volume” settings are stored for each input source.
- When the sound mode is in the “Direct” or “Pure Direct” mode, “MultEQ®”, “Dynamic EQ” and “Dynamic Volume” settings cannot be configured.
- When the sound mode is in “DTS Virtual:X” or sound mode that have “+Virtual:X” in the sound mode name, “MultEQ®”, “Dynamic EQ” and “Dynamic Volume” settings cannot be configured.

MultEQ®

MultEQ® compensates for both time and frequency characteristics of the listening area based on “Audyssey® Setup” measurement results. Selection is done from three types of compensation curves. We recommend the “Reference” setting.

Reference (Default)**:**	Selects the default calibrated setting with a slight roll off at high frequencies, which is optimized for movies.
L/R Bypass:	Selects the reference setting, but bypasses MultEQ® on the front left and right speakers.
Flat:	Selects the calibrated setting which is optimized for small rooms where your listening position is closer to the speakers.
Off:	Do not use “MultEQ®”.

- When using headphones, “MultEQ®” is automatically set to “Off”.

Dynamic EQ

Solves the problem of deteriorating sound quality as volume is decreased by taking into account human perception and room acoustics.

Works with MultEQ®.

On (Default)**:**	Use “Dynamic EQ”.
Off:	Do not use “Dynamic EQ”.

- When the menu “Dynamic EQ” setting is “On”, it is not possible to do “Tone” adjustment. (☞ p. 115)

Reference Level Offset

Audyssey Dynamic EQ® is referenced to the standard film mix level. It makes adjustments to maintain the reference response and surround envelopment when the volume is turned down from 0 dB. However, film reference level is not always used in music or other non-film content. Dynamic EQ Reference Level Offset provides three offsets from the film level reference (5 dB, 10 dB, and 15 dB) that can be selected when the mix level of the content is not within the standard. Recommended setting levels for content are shown below.

0 dB (Film Reference) (Default)**:**	Optimized for content such as movies.
5 dB :	Select this setting for content that has a very wide dynamic range, such as classical music.
10 dB :	Select this setting for jazz or other music that has a wider dynamic range. This setting should also be selected for TV content as that is usually mixed at 10 dB below film reference.
15 dB :	Select this setting for pop/rock music or other program material that is mixed at very high listening levels and has a compressed dynamic range.

- Setting is enabled when “Dynamic EQ” is “On”. (☞ p. 161)

■ Dynamic Volume

Solves the problem of large variations in volume level between TV, movies and other content (between quiet passages and loud passages, etc.) by automatically adjusting to the user's preferred volume setting.

Works with MultEQ®.

Heavy:	Most adjustment to softest and loudest sounds.
Medium:	Medium adjustment to loudest and softest sound.
Light:	Least adjustment to loudest and softest sounds.
Off (Default)**:**	Do not use "Dynamic Volume".

- If "Dynamic Volume" is set to "Yes" in "Audyssey® Setup", the setting is automatically changed to "Medium". (☞ p. 181)

Graphic EQ

Uses the graphic equalizer to adjust the tone of each speaker.

- Speakers for which "Graphic EQ" can be set differ according to the sound mode.
- This can be set when "MultEQ®" setting is "Off". (☞ p. 160)
- This cannot be set when the sound mode is set to "Direct" or "Pure Direct".
- If you are using headphones, you can set the equalizer for headphones. (☞ p. 162)

■ Graphic EQ / Headphone EQ

Set whether to use the graphic equalizer or not.

On:	Use the graphic equalizer.
Off (Default)**:**	Do not use the graphic equalizer.

- "Headphone EQ" is set in the menu when headphones are used.

Speaker Selection

Select whether to adjust tones for individual speakers or for all speakers.

All:	Adjust all speaker tones together.
Left/Right (Default)**:**	Adjust the left and right speaker tones together.
Each:	Adjust the tone for each speaker.

Adjust EQ

Adjust tonal balance for each frequency band.

1. Select the speaker.
2. Select the adjustment frequency band.
   63 Hz / 125 Hz / 250 Hz / 500 Hz / 1 kHz / 2 kHz / 4 kHz / 8 kHz / 16 kHz
3. Adjust the level.
   –20.0 dB – +6.0 dB (Default: 0.0 dB)

- Front Dolby and Surround Dolby speakers can only be set when 63 Hz/125 Hz/250 Hz/500 Hz/1 kHz.

Curve Copy

Copy the Flat correction curve created in Audyssey® Setup.

- “Curve Copy” is displayed after Audyssey® Setup has been performed.
- “Curve Copy” cannot be used when using headphones.

Set Defaults

The “Graphic EQ” settings are returned to the default settings.

Video

Make video-related settings.

Picture Adjust

Picture quality can be adjusted.

- This can be set when “HDMI” is assigned for each input source. (☞ p. 178)
- “Contrast”, “Brightness”, “Saturation”, “Noise Reduction” and “Enhancer” can be set when “Picture Mode” is set to “Custom”. (☞ p. 164)
- “Picture Adjust” settings are stored for each input source.
- “Picture Adjust” cannot be set when 4K signals are input.
- This cannot be set when “Video Mode” is set to “Bypass” or “i/p Scaler” is set to “Off”. (☞ p. 171)

■ Picture Mode

Select the desired picture mode according to the video content and your viewing environment.

Standard:	The standard mode suited for most living room viewing environments.
Movie:	A mode suited for watching movies in a dark room such as a theater room.
Vivid:	A mode that makes graphic images for games, etc. brighter and more vivid.
Streaming:	A mode suited for low bit rate video sources.
ISF Day:	A mode suited for watching movies in a bright room during the day.
ISF Night:	A mode suited for watching movies in a dark room at night.
Custom:	Adjusts the picture quality manually.
Off (Default)**:**	No picture quality adjustment is done with this unit.

- The two special adjustment modes, “ISF Day” and “ISF Night”, should be used by a certified technician to adjust the color calibration to match the installation conditions.
  We recommend that the settings and adjustments be carried out by an ISF-certified technician.
- These settings can also be configured using “Picture Mode” in the option menu. (☞ p. 164)

■ Contrast

Adjust picture contrast.

-50 – +50 (Default : 0)

■ Brightness

Adjust picture brightness.

-50 – +50 (Default : 0)

■ Saturation

Adjust picture chroma level (color saturation).

-50 – +50 (Default : 0)

■ Noise Reduction

Reduce overall video noise.

Low / Medium / High / Off (Default : Off)

■ Enhancer

Emphasize picture sharpness.

0 – +12 (Default : 0)

HDMI Setup

Make settings for HDMI Audio Out, HDMI Pass Through and HDMI Control settings.

NOTE

- When “HDMI Pass Through” and “HDMI Control” is set to “On”, it consumes more standby power. (“ HDMI Pass Through ” (☞ p. 166), “ HDMI Control ” (☞ p. 168))
  If you are not using this unit for an extended period, it is recommended that you unplug the power cord from the power outlet.

HDMI Audio Out

Select HDMI audio output device.

AVR (Default)**:**	Play back through speakers connected to the unit.
TV:	Play back through TV connected to the unit.

- When the HDMI Control function is activated, priority is given to the TV audio setting. (☞ p. 131)
- When the power of this unit is on and “HDMI Audio Out” is set to “TV”, audio is output as 2-channel from the HDMI OUT connector.

HDMI Pass Through

Selects how this unit will transmit HDMI signals to the HDMI output in standby power mode.

On:	Transmits the selected HDMI input through this unit’s HDMI output when this unit is in standby power mode.
Off (Default)**:**	No HDMI signals are transmitted through this unit’s HDMI output in standby power mode.

Pass Through Source

Sets the HDMI connector that inputs HDMI signals when in standby.

Last (Default)**:**	The most recently used input source will go into standby mode.
CBL/SAT / DVD / Blu-ray / Game / AUX1 / AUX2 / Media Player / CD*:	Pass through the selected input source.

*"Pass Through Source" can be set when any of the HDMI connectors is assigned to "CD" for the input source in the "Input Assign" setting. (☞ p. 177)

- "Pass Through Source" can be set when "HDMI Control" is set to "On" or "HDMI Pass Through" is set to "On". (" HDMI Pass Through " (☞ p. 166), " HDMI Control " (☞ p. 168))

RC Source Select

Set whether to allow this unit to be turned on by the input source select button on the remote control when this unit is on standby.

Power On + Source (Default)**:**	The power of this unit is turned on and the input source changes.
Source Select Only:	The HDMI input source changes while this unit is on standby. The power display of this unit blinks when the input source select button of the remote control is pressed.

- "RC Source Select" can be set when "HDMI Control" is set to "On" or "HDMI Pass Through" is set to "On". (" HDMI Pass Through " (☞ p. 166), " HDMI Control " (☞ p. 168))

HDMI Control

You can link operations with devices connected to HDMI and compatible with HDMI Control.

On:	Use HDMI Control function.
Off (Default)**:**	Do not use HDMI Control function.

- Please consult the operating instructions for each connected device to check the settings.
- Refer to “HDMI Control function” for more information about the HDMI Control function. (☞ p. 131)

NOTE

- If the “HDMI Control” settings have been changed, always reset the power to connected devices after the change.

ARC

On the TV connected to the HDMI MONITOR connector, set whether to receive sound from the TV via HDMI.

On:	Use ARC function.
Off (Default)**:**	Do not use ARC function.

- You can adjust the volume of this unit using the TV remote control.
- If using this function, use a TV compatible with ARC (Audio Return Channel) and enable the HDMI Control function of the TV.
- When “HDMI Control” is set to “On”, the “ARC” settings automatically switch “On”. (☞ p. 168)

NOTE

- If the “ARC” settings have been changed, always reset the power to connected devices after the change.
- Using an eARC function-compatible television enables audio playback from the speaker connected to this unit, regardless of “ARC” settings in the menu.

TV Audio Switching

Sets automatic switching to the “TV Audio” input when a TV connected via HDMI sends an appropriate CEC control command to this unit.

On (Default)**:**	Select the “TV Audio” input automatically when receiving a command from the TV.
Off:	Do not select the “TV Audio” input automatically when receiving a command from the TV.

- “TV Audio Switching” can be set when “HDMI Control” is set to “On”. (☞ p. 168)

Power Off Control

Links the power standby of this unit to external devices.

All (Default)**:**	If power to a connected TV is turned off independently of the input source, power to this unit is automatically set to standby.
Video:	With an input source being selected that is assigned either “HDMI”, “COMP” or “VIDEO”, when you turn the power of the TV off, power to this unit is automatically set to standby. (☞ p. 178)
Off:	This unit does not link with power to a TV.

- “Power Off Control” can be set when “HDMI Control” is set to “On”. (☞ p. 168)

Power Saving

If “TV Speaker” is set as the audio output setting of your TV, this unit is automatically set to standby mode to reduce power consumption.
This function is activated in the following cases.

- When “TV Audio” is selected as the input source of this unit
- When playing content from a device connected by HDMI

On:	Use Power Saving function.
Off (Default)**:**	Do not use Power Saving function.

- “Power Saving” can be set when “HDMI Control” is set to “On”. (☞ p. 168)

Smart Menu

This function can be used to configure the settings of this unit, select an input source and set Tuner and Internet Radio stations using the TV remote control.

On:	Use Smart Menu function.
Off:	Do not use Smart Menu function.

- “Smart Menu” can be set when “HDMI Control” is set to “On”. (☞ p. 168)

NOTE

- If the “Smart Menu” settings have been changed, always reset the power to connected devices after the change.
- The Smart Menu function may not work properly depending on the specifications of your TV. In this case, set “Smart Menu” to “Off”.

Output Settings

Makes settings for video output.

- “Output Settings” cannot be set when 4K signals are input.
- “Video Mode”, “i/p Scaler”, “Resolution”, “Progressive Mode” and “Aspect Ratio” settings are stored for each input source. (“ Video Mode ” (☞ p. 171), “ i/p Scaler ” (☞ p. 172), “ Resolution ” (☞ p. 172), “ Progressive Mode ” (☞ p. 173), “ Aspect Ratio ” (☞ p. 173))

■ Video Mode

Configure the video processing method to match the type of video content.

Auto (Default)**:**	Process video automatically based on the HDMI content information.
Game:	Always process video for game content. Minimize the video delay when the video is delayed compared to the button operations on the controller of the game console.
Movie:	Perform image processing that is suitable for contents other than games.
Bypass:	Remove all video processing from the HDMI video path.

- If “Video Mode” is set to “Auto”, the mode is switched according to the input contents.
- Information displays such as the volume bar cannot be overlaid with the video signal when “Video Mode” is set to “Bypass”.
- This item can be set when “HDMI” is assigned for each input source.

i/p Scaler

Set the video input signal to be subjected to i/p Scaler processing. i/p Scaler will convert the resolution of the input video signal to the value set in “Resolution”. (☞ p. 172)

On:	Use i/p Scaler function.
Off:	Do not use i/p Scaler function.

- This item can be set when “HDMI” is assigned for each input source.
- This item can be set when “Video Mode” is set to anything other than “Bypass”. (☞ p. 171)
- This function is not effective when the input signal is “x.v.Color”, 3D, sYCC601 color, Adobe RGB color, Adobe YCC601 color or computer resolutions.

Resolution

Set the output resolution.

Auto (Default)**:**	The resolution supported by the TV connected to the HDMI MONITOR OUT connector is detected automatically and the appropriate output resolution is set.
480p/576p / 1080i / 720p / 1080p / 1080p:24Hz / 4K :	Set the output resolution.

- When set to “1080p:24Hz”, you can enjoy film-like pictures for film sources (in 24 Hz). For video sources and mixed sources, we recommend setting the resolution to “1080p”.
- It is not possible to convert a 50 Hz signal into 1080p/24Hz. It is output at a resolution of 1080p/50Hz.
- This item can be set when “i/p Scaler” is set to “On”. (☞ p. 172)

■ Progressive Mode

Set an appropriate progressive conversion mode for the source video signal.

Auto (Default)**:**	The video signal is automatically detected and the appropriate mode is set.
Video:	Select mode suitable for video playback.
Video and Film:	Select mode suitable for video and 30-frame film material playback.

- This item can be set when “i/p Scaler” is set to “On”. (☞ p. 172)

■ Aspect Ratio

Set the aspect ratio for the video signals output to the HDMI.

16:9 (Default)**:**	Output at 16:9 aspect ratio.
4:3 :	Output at 4:3 aspect ratio with black bars on the sides of a 16:9 TV screen. (except for 480p/576p output)

- This item can be set when “i/p Scaler” is set to “On”. (☞ p. 172)

On Screen Display

Select the on-screen display user interface preferences.

■ Volume

Sets where to display the volume level.

Bottom (Default)**:**	Display at the bottom.
Top:	Display at the top.
Off:	Turn display off.

- When the master volume display is hard to see when superimposed text (closed captioning) or movie subtitles are present, set to “Top”.

■ Info

Displays status of operation temporarily when the input source is switched.

On (Default)**:**	Turn display on.
Off:	Turn display off.

■ Now Playing

Sets the display time for the playback display when the input source is “HEOS Music” or “Tuner”.

Always On (Default)**:**	Show display continuously.
Auto Off:	Show display for 30 seconds after operation.

4K Signal Format

Set the 4K signal format to be played back by this unit when the TV or playback device connected to this unit is HDMI 4K (60Hz/50Hz) signal compatible.

■ 4K Signal Format

Set the format of the 4K signal played back by this unit.

Standard (Default)**:**	Select if your TV and playback devices support standard 4K 60p 4:2:0 8 bit video signals.
Enhanced:	Select if your TV, playback devices, and cables support high quality 4K 60p 4:4:4, 4:2:2 or 4K 60p 4:2:0 10 bit video signals.

【Relation between the “4K Signal Format” setting and supported resolutions】

Support Resolution	Color Space	Pixel Depth	4K Signal Format	
			Enhanced	Standard (Default)
4K 24p, 4K 30p, 4K 25p	RGB / YCbCr 4:4:4	8 bit	✓	✓
		10,12 bit	✓	–
	YCbCr 4:2:2	12 bit	✓	✓
4K 60p, 4K 50p	YCbCr 4:2:0	8 bit	✓	✓
		10,12 bit	✓	–
	RGB / YCbCr 4:4:4	8 bit	✓	–
	YCbCr 4:2:2	12 bit	✓	–

- When setting this to “Enhanced”, we recommend using a “Premium High Speed HDMI Cable” or “Premium High Speed HDMI Cable with Ethernet” that has an “HDMI Premium Certified Cable” label attached to the product package.
- When this setting is “Enhanced”, configure the television or playback device settings to match this setting.
- When this setting is “Enhanced”, video may not be output correctly depending on the connected playback device or HDMI cable. In this case, change this setting to “Standard”.
- “Custom” is displayed for the setting item if our service engineers or custom installers has configured the HDMI signal format for this unit.
- “4K Signal Format” can also be set by the following procedure. However, the menu screen is not displayed. Watch the display while configuring the setting.

1. Press and hold the main unit’s ZONE2 SOURCE and STATUS at the same time for at least 3 seconds.
   “V.Format:<PAL>” appears on the display.
2. Press the main unit's DIMMER.
   “4K :<Standard>” appears on the display.
3. Use the main unit's ZONE2 SOURCE or INTERNET RADIO and select the 4K Signal Format.
4. Press the main unit’s STATUS to complete the setting.

TV Format

Set the video signal format to be output for the TV you are using.

■ Format

PAL (Default)**:**	Select PAL output.
NTSC:	Select NTSC output.

- “Format” can also be set by the following procedure. However, the menu screen is not displayed. Following the display content to make the setting.
  1. Press and hold the main unit’s ZONE2 SOURCE and STATUS at the same time for at least 3 seconds.
     “V.Format:<PAL>” appears on the display.
  2. Use the main unit’s ZONE2 SOURCE or INTERNET RADIO and set the video signal format.
  3. Press the main unit’s STATUS to complete the setting.

NOTE

- When a format other than the video format of the connected TV is set, the picture will not be displayed properly.

Inputs

Perform settings related to input source playback.

You do not have to change the settings to use the unit. Make settings when needed.

Input Assign

By making connections as indicated by the input sources printed on the audio/video input connectors of this unit, you can just press one of the input source select buttons to easily play back audio or video from a connected device.

Please change the assignment of the HDMI input connector, digital audio input connector, analog audio input connector, component video input connector and video input connector when connecting an input source that differs from that printed to the audio/video input connectors of this unit.

Sets the audio input mode for each “INPUT MODE” source. “AUTO” is normally recommended for this setting. This automatically detects and plays signal input to this unit prioritized in the following order: HDMI > DIGITAL > ANALOG.

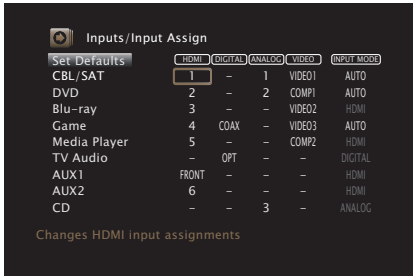

- By default, each item is set as follows.

Input source	Input connector				INPUT MODE
	HDMI	DIGITAL	ANALOG	VIDEO	
CBL/SAT	1	–	1	VIDEO1	AUTO
DVD	2	–	2	COMP1	AUTO
Blu-ray	3	–	–	VIDEO2	HDMI
Game	4	COAX	–	VIDEO3	AUTO
Media Player	5	–	–	COMP2	HDMI
TV Audio	–	OPT	–	–	DIGITAL
AUX1	FRONT	–	–	–	HDMI
AUX2	6	–	–	–	HDMI
CD	–	–	3	–	ANALOG

❑ TV set top box/satellite users please note

When using the digital audio output on a TV/satellite box:

To play the video signal assigned to “HDMI” combined with the audio signal assigned at “Input Assign” - “DIGITAL”, you will also need to select “DIGITAL” in the “INPUT MODE”.

- The same input connector can be assigned to multiple input sources. For example, assign the same HDMI input connector to multiple sources to use each input source in combination with analog or digital audio as you prefer. In such cases, set the audio connector for playback in “INPUT MODE”. (This feature will be supported via firmware update.)

■ HDMI

Set this to change the HDMI input connectors assigned to the input sources.

1 / 2 / 3 / 4 / 5 / 6 / 7 / FRONT:	Assign an HDMI input connector to the selected input source.
– :	Do not assign an HDMI input connector to the selected input source.

- When “HDMI Control” or “ARC” is set to “On” in the menu, “HDMI” cannot be assigned to “TV Audio”. (“ HDMI Control ” (☞ p. 168), “ ARC ” (☞ p. 168))
- The eARC function does not operate when “HDMI” is set as the “TV Audio” input source.

■ DIGITAL

Set this to change the digital audio input connectors assigned to the input sources.

COAX (Coaxial) / **OPT** (Optical)**:**	Assign a digital audio input connector to the selected input source.
– :	Do not assign a digital audio input connector to the selected input source.

■ ANALOG

Set this to change the analog audio input connectors assigned to the input sources.

1 / 2 / 3:	Assign a analog audio input connector to the selected input source.
– :	Do not assign a analog audio input connector to the selected input source.

■ VIDEO

Set this to change the component video input connectors and composite video input connectors assigned to the input sources.

COMP1 (Component video) / **COMP2 / VIDEO1 / VIDEO2 / VIDEO3:**	Assign the video input connector to the selected input source.
– :	Do not assign a video input connector to the selected input source.

INPUT MODE

Set the audio input modes for each input source.
It is normally recommended to set the audio input mode to “AUTO”.

AUTO (Default)**:**	Automatically detect input signal and perform playback.
HDMI:	Play only signals from HDMI input.
DIGITAL:	Play only signals from digital audio input.
ANALOG:	Play only signals from analog audio input.

- When digital signals are properly input, the DIG. indicator lights on the display. If the DIG. indicator does not light, check “Input Assign” and the connections. (☞ p. 177)
- If “HDMI Control” is set to “On” and a TV compatible with the ARC is connected via the HDMI MONITOR connectors, the input mode whose input source is “TV Audio” is fixed to ARC.
- When an eARC function-compatible television is connected to the HDMI MONITOR connector, the input mode whose input source is “TV Audio” is fixed to eARC.

Set Defaults

The “Input Assign” settings are returned to the default settings.

Source Rename

- Changes the display name of the input source.
  Once changed, the name is displayed on the display and menu screens of this unit.
- If the device name can be acquired from a connected HDMI device, the display name is changed automatically.
  Use this function to change names as needed when the device you are using differs from the input source on this unit. (This feature will be supported via firmware update.)

CBL/SAT / DVD / Blu-ray / Game / AUX1 / AUX2 / Media Player / CD / TV Audio / Phono:	Change the display name for input source.
Set Defaults:	The “Source Rename” settings are returned to the default settings.

- Up to 16 characters can be input.

Hide Sources

Remove from the display input sources that are not used.

Show (Default)**:**	Use this source.
Hide:	Do not use this source.

Source Level

This function corrects the playback level of the selected input source’s audio input.

Make this setting if there are differences in the input volume levels between the different sources.

-12 dB – +12 dB (Default : 0 dB)

- “Source Level” settings are stored for each input source.

Speakers

The acoustic characteristics of the connected speakers and listening room are measured and the optimum settings are made automatically. This is called “Audyssey® Setup”.

You do not have to perform Audyssey® Setup when you have already performed “Speaker Calibration” in “Setup Assistant”.

To set up the speakers manually, use “Manual Setup” on the menu. (☞ p. 191)

Audyssey® Setup

To perform measurement, place the Sound calibration microphone in multiple locations all around the listening area. For best results, we recommend you measure in six positions, as shown in the illustration.

When measuring the second and subsequent positions, install the Sound calibration microphone within 60 cm of the first measurement position (main listening position).

- If you perform Audyssey® Setup, Audyssey MultEQ®, Audyssey Dynamic EQ® and Audyssey Dynamic Volume® functions are enabled. (☞ p. 160)

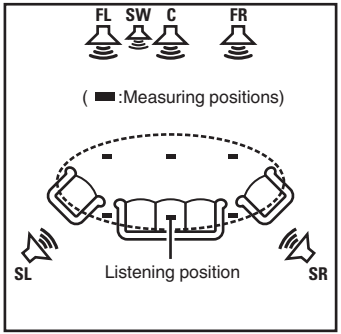

FL Front speaker (L)
FR Front speaker (R)
C Center speaker
SW Subwoofer
SL Surround speaker (L)
SR Surround speaker (R)

About the main listening position

The main listening position is the position where listeners would normally sit or where one would normally sit alone within the listening environment. Before starting Audyssey® Setup, place the Sound calibration microphone in the main listening position.

Audyssey MultEQ® uses the measurements from this position to calculate speaker distance, level, polarity, and the optimum crossover value for the subwoofer.

NOTE

- Make the room as quiet as possible. Background noise can disrupt the room measurements. Close windows and turn off the power on electronic devices (radios, air conditioners, fluorescent lights, etc.). The measurements could be affected by the sounds emitted by such devices.
- During the measurement process, place cell phones outside the listening room. Cell phone signals could disrupt the measurements.
- Do not stand between the speakers and Sound calibration microphone or allow obstacles in the path while the measurements are being made. Also, install the Sound calibration microphone at least 50 cm away from the wall. Failure to do so will result in inaccurate readings.
- During the measurement process, audible test tones will come from the speakers and subwoofer(s), but this is part of normal operation. If there is background noise in the room, these test signals will increase in volume.
- Operating VOLUME ▲▼ on the remote control unit or VOLUME on the main unit during the measurements will cancel the measurements.
- Measurement cannot be performed when headphones are connected. Unplug the headphones before performing Audyssey® Setup.

Procedure for speaker settings (Audyssey® Setup)

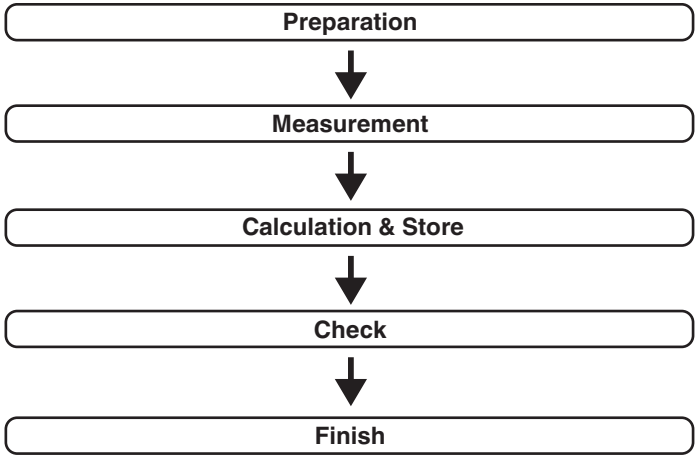

1 Attach the Sound calibration microphone to the supplied microphone stand or own tripod and install it at the main listening position.

When installing the Sound calibration microphone, point the tip of the microphone toward the ceiling and adjust the height to match the height of the ears of a listener in a seated position.

2 If using a subwoofer capable of the following adjustments, set up the subwoofer as shown below.

❑ When using a subwoofer with a direct mode

Set the direct mode to “On” and disable the volume adjustment and crossover frequency setting.

❑ When using a subwoofer without a direct mode

Make the following settings:

- Volume : 12 o’clock position
- Crossover frequency : Maximum/Highest Frequency
- Low pass filter : Off
- Standby mode : Off

3 Connect the Sound calibration microphone to the SETUP MIC jack of this unit.

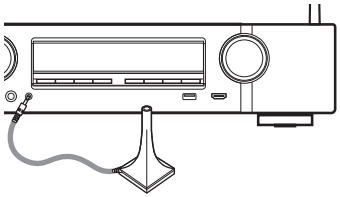

When the Sound calibration microphone is connected, the following screen is displayed.

4 Select “Start”, then press ENTER.

Audyssey® Setup can also make the following settings.

- **Amp Assign**
  The signals output from the SURROUND BACK speaker terminals can be switched in accordance with your speaker environment. (“ Amp Assign ” (☞ p. 191))
- **Channel Select**
  If channels that are not to be used are set in advance, measurement for the set channels is skipped, and measuring time can be reduced. You can also change the number of surround back speakers.
- **Dolby Speaker Setup**
  Set the distance between the Dolby Atmos Enabled speaker and the ceiling.
  This can be set when “Assign Mode” is set to “Front Dolby” or “Surround Dolby” in the “Amp Assign” settings. (☞ p. 191)

5 Follow the instructions on the screen display and press “Next” to proceed further.

6 When the following screen is displayed, select “Begin Test” and then press ENTER.

Start the measurement of the first position.

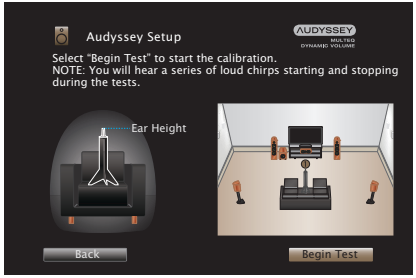

- Measurement requires several minutes.

NOTE

- **If “Caution!” is displayed on TV screen:**
  - Go to “Error messages” (☞ p. 189). Check any related items, and perform the necessary procedures.

7 When the detected speaker is displayed, select “Next” and then press ENTER.

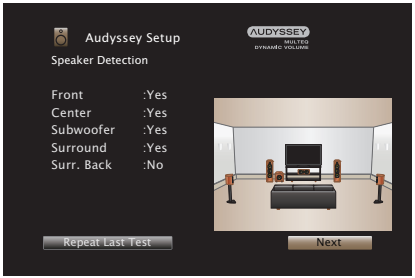

8 Move the Sound calibration microphone to position 2, select “Continue”, then press ENTER.

The measurement of the second position starts.
Measurements can be made in up to six positions.

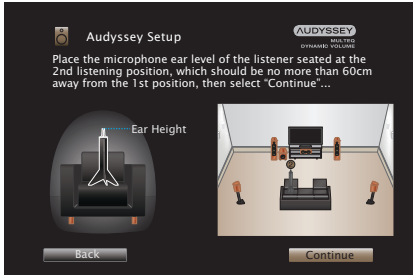

❑ Stopping Audyssey® Setup

① Press BACK to display the popup screen.
② Press ◁ to select “Yes”, then press ENTER.

9 Repeat step 8, measuring positions 3 to 6.

- To skip measuring the fourth and subsequent listening position, press ◁ to select “Complete” and press ENTER to proceed to step 11.

10 Select “Continue”, then press ENTER.

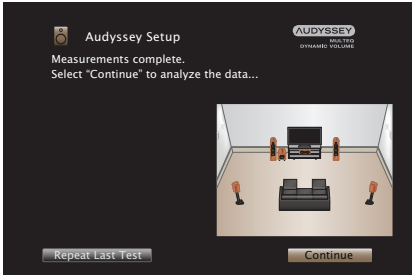

Start the analysis and storage of the measurement results.

- Analysis takes several minutes to complete.
  The more speakers and measurement positions that there are, the more time it takes to perform the analysis.

NOTE

- When the measurement results are being saved, make sure the power is not turned off.

11 Perform the settings for Audyssey Dynamic EQ® and Audyssey Dynamic Volume®.

The following screen is displayed during the analysis. Configure the settings as preferred.

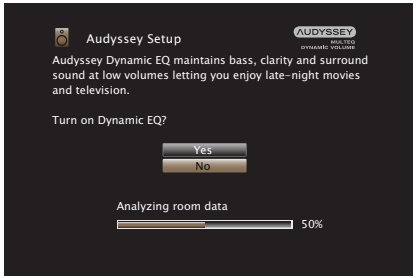

- Dynamic EQ corrects the frequency response in consideration of the audio characteristics of the room and human hearing ability so that sound can be heard even at low volume.
  This is recommended when using the unit with the volume turned down, e.g. when enjoying a movie or TV program in the middle of the night.
- Dynamic Volume adjusts the output volume to the optimal level while constantly monitoring the level of the audio input to the unit. Optimal volume control is performed automatically without any loss in the dynamism and clarity of the sound when, for example, the volume suddenly increases for commercials shown during television programs.

12 When the analysis and storage ends, unplug the Sound calibration microphone from the SETUP MIC jack on the main unit and then press “Next”.

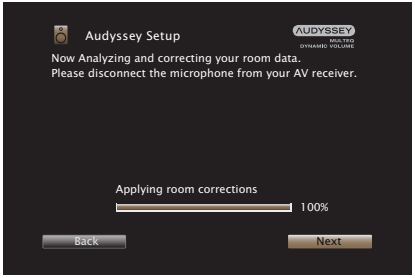

13 Select “Details” and press ENTER to verify the measurement results.

- Subwoofers may measure a greater reported distance than the actual distance due to added electrical delay common in subwoofers.

NOTE

- Do not change the speaker connection or subwoofer volume after Audyssey® Setup. If these are changed, run Audyssey® Setup again in order to configure the optimum equalizer settings.

Error messages

An error message is displayed if Audyssey® Setup could not be completed due to speaker placement, the measurement environment, etc. If an error message is displayed, check the relevant items and perform the necessary measures. Be sure to turn off the power before checking speaker connections.

Examples	Error details	Measures
No speakers found.	• Sound calibration microphone is not detected. • Not all speakers could be detected.	• Connect the included Sound calibration microphone to the SETUP MIC jack of this unit. • Check the speaker connections.
Ambient noise is too high or level is too low	• There is too much noise in the room. • Speaker or subwoofer sound is too low.	• Either turn off any device generating noise or move it away. • Perform again when the surroundings are quieter. • Check the speaker installation and the direction in which the speakers are facing. • Adjust the subwoofer's volume.
Front R : None	• The displayed speaker could not be detected.	• Check the connections of the displayed speaker.
Front R : Phase	• The displayed speaker is connected with the polarity reversed.	• Check the polarity of the displayed speaker. • For some speakers, this error message may be displayed even if the speaker is properly connected. If you are sure the connection is correct, press ▷ to select "Ignore", then press ENTER.

Retrieving Audyssey® Setup settings

If you set “Restore...” to “Restore”, you can return to Audyssey® Setup measurement result (value calculated at the start by MultEQ®) even when you have changed each setting manually.

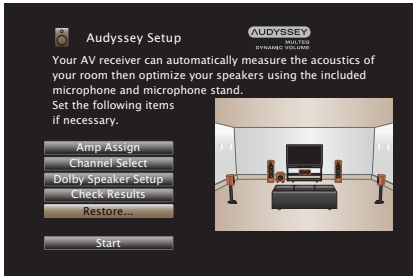

Manual Setup

Perform when setting the speakers manually or when changing settings made in Audyssey® Setup.

- If you add or remove a speaker after performing Audyssey® Setup, you will no longer be able to select Audyssey MultEQ®, Audyssey Dynamic EQ® or Audyssey Dynamic Volume®. (☞ p. 160)
- “Manual Setup” can be used without changing the settings. Please set if necessary.

Amp Assign

Select the power amplifier usage method to match your speaker system.
See “Speaker configuration and “Amp Assign” settings” (☞ p. 41) regarding the speaker configuration and connection.

■ Assign Mode

Select how to use the power amp.

Surround Back (Default)**:**	Setting for 7.1-channel playback using surround back speakers.
Front Height:	Setting for 7.1-channel playback using front height speakers.
Top Front:	Setting for 7.1-channel playback using top front speakers.
Top Middle:	Setting for 7.1-channel playback using top middle speakers.
Front Dolby:	Setting for 7.1-channel playback using front Dolby Atmos Enabled speakers.
Surround Dolby:	Setting for 7.1-channel playback using surround Dolby Atmos Enabled speakers.

ZONE2:	Setting to assign the unit's built-in power amplifier for ZONE2 and output the audio in stereo.
Bi-Amp:	Setting to use the front speakers via the bi-amp connection.
Front B:	Setting for playback using a second front speaker. You can switch the playback between front speaker A and B according to your liking. Switch the front speaker using "Front Speaker" in the menu. (☞ p. 201)

Speaker Config.

Select whether or not speakers are present, playback capacity for low bass frequencies and speaker size.

■ Front

Set the front speaker size.

Large (Default)**:**	Use a large speaker that can adequately play back very low bass frequencies.
Small:	Use a small speaker that has inadequate playback capacity for very low bass frequencies.

- When "Subwoofer" is set to "No", "Front" is automatically set to "Large".
- When "Front" is set to "Small", you cannot set speakers other than "Front" to "Large".

Center

Set the presence and size of the center speaker.

Large:	Use a large speaker that can adequately play back very low bass frequencies.
Small (Default)**:**	Use a small speaker that has inadequate playback capacity for very low bass frequencies.
None:	Select when a center speaker is not connected.

Subwoofer

Set the presence of a subwoofer.

Yes (Default)**:**	Use a subwoofer.
No:	Select when a subwoofer is not connected.

- When “Subwoofer” is set to “No” and you set “Front” to “Small”, “Subwoofer” is automatically set to “Yes”.

Surround

Set the presence and size of the surround speakers.

Large:	Use a large speaker that can adequately play back very low bass frequencies.
Small (Default)**:**	Use a small speaker that has inadequate playback capacity for very low bass frequencies.
None:	Select when the surround speakers are not connected.

- When “Surround” is set to “None”, “Surr. Back” and “Surround Dolby” are automatically set to “None”.

Surr. Back

Set the presence, size and number of surround back speakers.

Large:	Use a large speaker that can adequately play back very low bass frequencies.
Small (Default)**:**	Use a small speaker that has inadequate playback capacity for very low bass frequencies.
None:	Select when the surround back speakers are not connected.

2 spkrs (Default)**:**	Use two surround back speakers.
1 spkr:	Use only one surround back speaker. Connect to the L terminal to SURROUND BACK when this setting is selected.

- When “Assign Mode” setting is “Surround Back”, you can make this setting. (☞ p. 191)

Front Height

Set the presence and size of the front height speakers.

Large:	Use a large speaker that can adequately play back very low bass frequencies.
Small (Default)**:**	Use a small speaker that has inadequate playback capacity for very low bass frequencies.
None:	Select when the front height speakers are not connected.

- When “Assign Mode” setting is “Front Height”, you can make this setting. (☞ p. 191)

Top Front

Set the presence and size of the top front speakers.

Large:	Use a large speaker that can adequately play back very low bass frequencies.
Small (Default)**:**	Use a small speaker that has inadequate playback capacity for very low bass frequencies.
None:	Select when the top front speakers are not connected.

- When “Assign Mode” setting is “Top Front”, you can make this setting. (☞ p. 191)

Top Middle

Set the presence and size of the top middle speakers.

Large:	Use a large speaker that can adequately play back very low bass frequencies.
Small (Default)**:**	Use a small speaker that has inadequate playback capacity for very low bass frequencies.
None:	Select when the top middle speakers are not connected.

- When “Assign Mode” setting is “Top Middle”, you can make this setting. (☞ p. 191)

Front Dolby

Set the presence and size of the front Dolby speakers.

Large:	Use a large speaker that can adequately play back very low bass frequencies.
Small (Default)**:**	Use a small speaker that has inadequate playback capacity for very low bass frequencies.
None:	Select when the front Dolby speakers are not connected.

- When “Assign Mode” setting is “Front Dolby”, you can make this setting. (☞ p. 191)

Surround Dolby

Set the presence and size of the surround Dolby speakers.

Large:	Use a large speaker that can adequately play back very low bass frequencies.
Small (Default)**:**	Use a small speaker that has inadequate playback capacity for very low bass frequencies.
None:	Select when the surround Dolby speakers are not connected.

- When “Assign Mode” setting is “Surround Dolby”, you can make this setting. (☞ p. 191)

Distances

Set distance from listening position to speakers.
Measure beforehand the distance from the listening position to each speaker.

■ Unit

Set the unit of distance.

Meters (Default)

Feet

■ Step

Set the minimum variable width of the distance.

0.1 m / 0.01 m (Default: 0.1 m)

1 ft / 0.1 ft

■ Set the distance

0.00 m – 18.00 m / 0.0 ft – 60.0 ft

- The speakers that can be selected differ depending on the “Amp Assign” and “Speaker Config.” settings. (“ Amp Assign ” (☞ p. 191), “ Speaker Config. ” (☞ p. 192))
- Default settings:
  Front L / Front R / F. Height L / F. Height R / Center / Front Dolby L / Front Dolby R / Subwoofer: 3.60 m (12.0 ft)
  Speakers other than the above: 3.00 m (10.0 ft)
- Set the difference in the distance between the speakers to less than 6.00 m (20.0 ft).

■ Dolby Speaker Setup

Set the distance between the Dolby Atmos Enabled speaker and the ceiling.

0.90 m - 3.30 m / 3.0 ft - 11.0 ft
(Default : 1.80 m / 6.0 ft)

- This can be set when “Front Dolby” or “Surround Dolby” is set to “Large” or “Small” in “Speaker Config.”.

■ Set Defaults

The “Distances” settings are returned to the default settings.

Levels

Set the volume of the test tone to be the same at the listening position when it is output from each speaker.

■ Test Tone Start

A test tone is output from the selected speaker.
While listening to the test tone, adjust the volume output from the selected speaker.

–12.0 dB – +12.0 dB (Default : 0.0 dB)

- The set “Levels” are reflected in all sound modes.
- If you wish to adjust the channel level for each input source, carry out the settings in “Channel Level Adjust”. (☞ p. 114)
- When headphones are connected to the PHONES connector on this unit, you cannot set “Levels”.

■ Set Defaults

The “Levels” settings are returned to the default settings.

Crossovers

Set in accordance with the lower limit frequency of the base frequencies that can be played back through each speaker. See the speaker manual for information concerning speaker crossover frequency.

■ Speaker Selection

Selects how to set the crossover frequency.

All (Default)**:**	Sets the same crossover frequency for all speakers.
Individual:	Selects the crossover points for each speaker individually.

■ Set the crossover frequency

40 Hz / 60 Hz / 80 Hz / 90 Hz / 100 Hz / 110 Hz / 120 Hz / 150 Hz / 180 Hz / 200 Hz / 250 Hz (Default: 80 Hz)

- “Crossovers” can be set when the “Subwoofer Mode” setting is “LFE+Main”, or when you have a speaker that is set to “Small”. (☞ p. 200)
- The default crossover frequency is “80 Hz”, which will work best with the widest variety of speakers. We recommend setting to a higher frequency that the crossover frequency when small speakers are used. For example, set to “250 Hz” when the frequency range of the speakers is 250 Hz – 20 kHz.
- Sound below the crossover frequency is cut off from the output of the speakers set in “Small”. This cut off bass frequency is output from the subwoofer or front speakers.
- The speakers that can be set when “Individual” is selected differ depending on to the “Subwoofer Mode” setting. (☞ p. 200)
  - When “LFE” is selected, speakers set to “Small” at “Speaker Config.” can be set. If the speakers are set to “Large”, “Full Band” is displayed and the setting cannot be made. (☞ p. 192)
  - When “LFE+Main” is selected, speakers can be set regardless of the “Speaker Config.” setting. (☞ p. 192)

Bass

Set subwoofer and LFE signal range playback.

■ Subwoofer Mode

Select low range signals to be reproduced by subwoofer.

LFE (Default)**:**	The low range signal of the channel set to “Small” speaker size is added to the LFE signal output from the subwoofer.
LFE+Main:	The low range signal of all channels is added to the LFE signal output from the subwoofer.

- “Subwoofer Mode” can be set when “Speaker Config.” - “Subwoofer” on the menu is set to other than “No”. (☞ p. 193)
- Play music or a movie source and select the mode offering the strongest bass.
- If “Speaker Config.” - “Front” and “Center” are set to “Large”, and “Subwoofer Mode” is set to “LFE”, no sound may be output from the subwoofers, depending on the input signal or selected sound mode. (☞ p. 192) Select “LFE+Main” if you want the bass signals to always be produced from the subwoofer.

■ LPF for LFE

Set LFE signal playback range. Set this when you want to change the playback frequency (low pass filter point) of the subwoofer.

80 Hz / 90 Hz / 100 Hz / 110 Hz / 120 Hz / 150 Hz / 180 Hz / 200 Hz / 250 Hz (Default: 120 Hz)

Front Speaker

Set the front speaker A/B to use for every sound mode.

A (Default)**:**	Front speaker A is used.
B :	Front speaker B is used.
A+B :	Both front speakers A and B are used.

- This can be set when “Assign Mode” is set to “Front B”. (☞ p. 192)

Network

To use this unit by connecting it to a home network (LAN), you must configure network settings.
If you set up your home network (LAN) via DHCP, set “DHCP” to “On”. (Use the default setting.) This allows this unit to use your home network (LAN).
When assigning an IP address to each device manually, you need to assign an IP address to this unit using the “IP Address” settings, and enter information about your home network (LAN) such as the gateway address and subnet mask, etc.

Information

Display network information.

Friendly Name / Connection / SSID / DHCP / IP Address / MAC Address (Ethernet) / MAC Address (Wi-Fi) / Wi-Fi signal strength

Connection

Choose whether to connect the home network to a wireless LAN or a wired LAN.
When connecting to the network using wired LAN, select “Wired (Ethernet)” after connecting a LAN cable.
When connecting to the network using wireless LAN, select “Wireless (Wi-Fi)” and configure the “Wi-Fi Setup”. (☞ p. 203)

■ Connect Using

Select the method for connecting to the home network (LAN).

Wired (Ethernet):	Use a LAN cable to connect to a network.
Wireless (Wi-Fi) (Default)**:**	Use the wireless LAN (Wi-Fi) function to connect to a network.

Wi-Fi Setup

Connect to a wireless LAN (Wi-Fi) router.
The router can be connected in the following ways. Select the connection method to suit your home environment.

■ Scan Networks

Select the network you wish to connect to from the list of possible networks shown on the TV screen.

1. Select the network you wish to connect to from the list of wireless networks.
   Select “Rescan” if the network cannot be found.
2. Enter your password and select “OK”.

■ Use iOS Device

Use your iOS device (iPhone/iPod/iPad) to connect to the network. By connecting your iOS device to this unit using Wi-Fi, the unit can be automatically connected to the same network as your device.

1. Select “Use iOS Device” on the TV screen.
2. Check that your iOS device is connected to the wireless LAN (Wi-Fi) router and select “Marantz NR1710” from “SET UP NEW AIRPLAY SPEAKER...” at the bottom of the Wi-Fi configuration screen of your iOS device.
3. Tap “Next” on the screen of the iOS device.

- The iOS device firmware version needs to support iOS 7 or later.

WPS Router

Use a WPS-compatible router to connect using the push button method.

1. Select “Push Button” on the TV screen.
2. Switch to the WPS mode by pressing the WPS button of the router you wish to connect to.
   - The time for pressing the button varies depending on the router.
3. Select “Connect” on the TV screen within 2 minutes.

Manual

Enter the name (SSID) and password of the network you wish to connect to.

1. Set the following items.

SSID:	Input the name of the wireless network (SSID).
Security:	Select the encryption method according to the encryption setting of the access point you are using.
Password:	Input the password.

2. Select “Connect” at the end of the setting.

- The wireless LAN (Wi-Fi) settings of this unit can also be configured from a PC or tablet that supports wireless LAN connection.
  1. Press and hold the M-DAX and SOUND MODE buttons on the main unit for at least 3 seconds when the power of the unit is on.
  2. Connect the wireless LAN of the PC or tablet used to “Marantz NR1710” when the message “Connect your Wi-Fi device to Wi-Fi network called “Marantz NR1710”.” appears in the display.
  3. Start up the browser and enter “192.168.1.16/Settings/” in the URL.
  4. Use the browser to enter the settings, select “Connect” and then exit the settings.
- The Default key of this unit is fixed at “1”. Set Default key of the router to “1” to use.

Settings

Configure the IP address.

- If you are using a broadband router (DHCP function), the information required for network connection such as the IP address will be automatically configured since the DHCP function is set to “On” in the default settings of this unit.
- Set up the IP Address, Subnet Mask, Default Gateway and DNS server information only when assigning a fixed IP address or when connecting to a network without DHCP function.

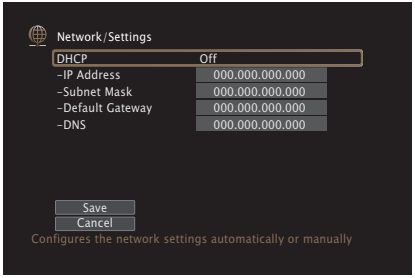

DHCP

Selects how to connect to the network.

On (Default)**:**	Configure the network settings automatically from your router.
Off:	Configure the network settings manually.

IP Address

Set the IP address within the ranges shown below.

- The Network Audio function cannot be used if other IP addresses are set.

  CLASS A: 10.0.0.1 - 10.255.255.254

  CLASS B: 172.16.0.1 - 172.31.255.254

  CLASS C: 192.168.0.1 - 192.168.255.254

Subnet Mask

When connecting an xDSL modem or connector adapter directly to this unit, input the subnet mask indicated in the documentation supplied by your provider. Normally input “255.255.255.0”.

Default Gateway

When connected to a gateway (router), input its IP address.

DNS

Enter the DNS address indicated in the documentation supplied by your provider.

- If you cannot connect to the Internet, recheck the connections and settings. (☞ p. 65)
- If you do not understand about Internet connection, contact your ISP (Internet Service Provider) or the store from which you purchased your computer.

Network Control

Enables network communication in standby power mode.

Off In Standby (Default)**:**	Suspend network function during standby.
Always On:	Network is on during standby. Main unit operable with a network compatible controller.

- When using the web control function, Marantz 2016 AVR Remote App or HEOS App, use with the “Network Control” setting set to “Always On”.

NOTE

- When “Network Control” is set to “Always On”, the unit consumes more standby power.

Friendly Name

The Friendly Name is the name of this unit displayed on the network. You can change the Friendly Name according to your preferences.

■ Friendly Name

Selects Friendly Name from the list.

When you select “Other”, you can change the Friendly Name according to your preferences.

Home Theater /Living Room / Family Room / Guest Room / Kitchen / Dining Room / Master Bedroom / Bedroom / Den / Office / Other

- Up to 30 characters can be input.
- The default Friendly Name on first use is “Marantz NR1710”.

■ Set Defaults

Restores Friendly Name, which you had changed, to the default setting.

Diagnostics

Used to check the network connection.

■ Physical Connection

Checks the physical LAN port connection.

OK	
Error:	The LAN cable is not connected. Check the connection.

- When connected using a wireless LAN, “Connection Wireless (Wi-Fi)” will be displayed.

■ Router Access

Checks the connection from this unit to the router.

OK	
Error:	Failed to communicate with the router. Check the router settings.

■ Internet Access

Checks whether this unit has access to the Internet (WAN).

OK	
Error:	Failed to connect to the Internet. Check the Internet connection environment or router settings.

AirPlay

Settings for Apple AirPlay.

On (Default)**:**	Enables Apple AirPlay.
Off:	Disables Apple AirPlay.

HEOS Account

Make HEOS Account-related settings.
HEOS Account is needed in order to use HEOS Favorites.
The menu displayed differs depending on the status of the HEOS Account.

You have not signed in

■ I have a HEOS Account

If you already have a HEOS Account, enter the current account name and password to sign in.

■ Create Account

If you do not have a HEOS Account, create a new HEOS Account.

■ Forgot Password

If you have forgotten the password, an email explaining how to reset the password will be sent.

You have already signed in

■ Signed in As

The currently signed in HEOS Account is displayed.

■ Change Location

Change the regional settings for the signed in HEOS Account.

■ Change Password

Change the password for the signed in HEOS Account.

■ Delete Account

Delete the signed in HEOS Account.

■ Sign Out

Sign out from the HEOS Account.

General

Make various other settings.

Language

Set the language for display the menu on the TV screen.

English / Deutsch / Français / Italiano / Español / Nederlands / Svenska / Русский / Polski (Default : English)

- “Language” can also be set up by the following operation. However, the menu screen is not displayed. Watch the display while configuring the settings.
  1. Press and hold the main unit’s ZONE2 SOURCE and STATUS at the same time for at least 3 seconds.
     “V.Format:<PAL>” appears on the display.
  2. Press DIMMER on the main unit twice.
     “Lang.:<ENGLISH >” appears on the display.
  3. Use the main unit’s ZONE2 SOURCE or INTERNET RADIO and set the language.
  4. Press the main unit’s STATUS to complete the setting.

ECO

Configure the ECO Mode and auto standby mode settings.

■ ECO Mode

This mode can reduce the power consumption and heat generation of this unit when power on.

This is done by reducing the power supply line to the power amplifier, in turn the maximum power output.

On:	Power savings are always active, regardless of volume or input signal.
Auto (Default)**:**	Gives you the best balance between power savings and maximum power output: For low volume levels, the power savings are active. If you increase the volume level, the power savings are switched off automatically, so you can enjoy maximum output power without distortion. If the volume is set to a high level but no input signal is detected for more than 2 minutes, this unit will enable power savings. When an input signal is detected again or the input source is changed, this unit will automatically turn off power savings again at high volume levels.
Off:	No power savings.

- When the unit is switching between the different power saving states in “ECO Mode: Auto”, you may notice a click noise from the inside of this unit, this is normal.
- If content is paused for more than 2 minutes and playback is resumed from the same source at these high volume levels, there may be short delay before maximum power is restored.
- “ECO Mode” can also be switched by pressing ECO on the remote control unit.

Power On Default

Set the mode to ECO when the power is on.

Last (Default)**:**	The ECO Mode will be set to the previous setting before the power was switched off.
On:	When power is turned on, the mode will always be switched to the ECO Mode in “On”.
Auto:	When power is turned on, the mode will always be switched to the ECO Mode in “Auto”.
Off:	When power is turned on, the mode will always be switched to the ECO Mode in “Off”.

On Screen Display

Display the power consumption of this unit using a meter on the TV screen.

Always On:	Always display the meter on the TV screen.
Auto (Default)**:**	Display the meter when changing the mode or volume.
Off:	Do not display the meter.

■ Auto Standby

Set so the unit power automatically switches to standby.

❑ MAIN ZONE

Sets the time for switching to auto standby when there are no audio or video signals input into this unit.
Before the unit enters standby mode, “Auto Standby” is displayed on the unit display and the menu screen.

60 min:	The unit goes into standby after 60 minutes.
30 min:	The unit goes into standby after 30 minutes.
15 min (Default)**:**	The unit goes into standby after 15 minutes.
Off:	The unit does not go into standby automatically.

❑ ZONE2

When there are no operations for a certain period of time as set here, the power is automatically shut off even if there is audio or video input.

8 hours:	Switches ZONE2 the standby state after about 8 hours.
4 hours:	Switches ZONE2 to the standby state after about 4 hours.
2 hours:	Switches ZONE2 to the standby state after about 2 hours.
Off (Default)**:**	Does not automatically switch ZONE2 to the standby state.

ZONE2 Setup

Makes settings for audio playback with ZONE2.

- Values set for “Volume Limit” and “Power On Volume” are displayed according to the setting specified for the volume “Scale”. (☞ p. 159)
- This can be set when “Assign Mode” is set to “ZONE2”. (☞ p. 192)

■ Lch Level

Adjust the left channel output level.

-12 dB – +12 dB (Default : 0 dB)

■ Rch Level

Adjust the right channel output level.

-12 dB – +12 dB (Default : 0 dB)

■ Volume Level

Set the volume output level.

Variable (Default)**:**	Volume can be adjusted.
1 – 98 (–79 dB – 18 dB):	Volume is fixed at the desired level. The volume cannot be adjusting using the remote control unit.

- The dB value is displayed when the “Scale” setting is “ –79.5 dB – 18.0 dB”. (☞ p. 159)

■ Volume Limit

Make a setting for maximum volume.

60 (-20 dB) / 70 (-10 dB) / 80 (0 dB) (Default : 70 (-10 dB))	
Off:	Do not set a maximum volume.

- This can be set when “Volume Level” is set to “Variable”. (☞ p. 214)
- The dB value is displayed when the “Scale” setting is “-79.5 dB - 18.0 dB”. (☞ p. 159)

Power On Volume

Define the volume setting that is active when the power is turned on.

Last (Default)**:**	Use the memorized setting from the last session.
Mute:	Always mute when power is turned on.
1 – 98 (–79 dB – 18 dB):	The volume is adjusted to the set level.

- This can be set when “Volume Level” is set to “Variable”. (☞ p. 214)
- The dB value is displayed when the “Scale” setting is “-79.5 dB - 18.0 dB”. (☞ p. 159)

Mute Level

Set the amount of attenuation when muting is on.

Full (Default)**:**	The sound is muted entirely.
-40 dB :	The sound is attenuated by 40 dB down.
-20 dB :	The sound is attenuated by 20 dB down.

Zone Rename

Change the display title of each zone to one you prefer.

MAIN ZONE / ZONE2

Set Defaults:	The default setting is restored for the edited zone name.

- Up to 10 characters can be input.

Smart Select Names

Change the smart select name that appears on the TV screen to one you prefer.

Smart Select 1 / Smart Select 2 / Smart Select 3 / Smart Select 4

Set Defaults:	The default setting is restored for the edited smart select name.

- Up to 16 characters can be input.

Trigger Out

Select the conditions for activating trigger out.
For details about how to connect the DC OUT jack, see “DC OUT jack” (☞ p. 68).

❑ When setting for zone (MAIN ZONE / ZONE2)

Trigger out is activated through linkage to the power of the zone set to “On”.

❑ When setting for input source

Trigger out is activated through linkage to the power of the zone set to “On”.

- It is valid for the zone, which is set to “On” and “When setting for zone”.

On:	Activate trigger on this mode.
– – –:	Do not activate trigger on this mode.

Front Display

Makes settings related to the display on this unit.

■ Dimmer

Adjust the display brightness of this unit.

Bright (Default)**:**	Normal display brightness.
Dim:	Reduced display brightness.
Dark:	Very low display brightness.
Off:	Turns the display off.

- You can also adjust the display by pressing DIMMER on the main unit.

Firmware

Checks for the latest firmware information about updates and upgrades, updates the firmware, and sets up the notification message display for upgrades.

■ Check for Update

Check for firmware updates.
The firmware can be updated if a firmware update has been released.

Update Now:	Execute the update process. When the update starts, the menu screen is shut down. During the update, the progress is shown on the display.
Update Later:	Update later.

- This unit automatically retries updating if updating fails. If an update still cannot be performed, an “Update Error” message appears in the display. See “Troubleshooting” – “Update/upgrade error messages” for information on update error messages. (☞ p. 246)
  Check the conditions according to the message and try the update again.
- This menu cannot be selected when “Allow Update” is set to “Off”.

■ Auto-Update

Turns on Automatic Updates so that futures updates are automatically downloaded and installed when this unit is in standby mode.

❑ Auto-Update

This unit will automatically update to the newest firmware when in standby mode.

On:	Turns on Automatic Updates.
Off (Default)**:**	Turns off Automatic Updates.

❑ Time Zone

Change the time zone.
Set the time zone that matches the area where you live.

- This menu cannot be selected when “Allow Update” is set to “Off”.

Allow Update

Enable or disable updates and upgrades for this unit.

On (Default)**:**	Enables this unit to receive updates and upgrades.
Off:	Prevents this unit from receiving update and upgrade.

- This setting causes Incompatibilities between this unit and HEOS App.

Upgrade Notification

When the latest Upgrade firmware is available, a notification message is displayed on the TV screen at power on.
The notification message is displayed for about 40 seconds when the power is turned on.

On (Default)**:**	Display upgrade message.
Off:	Do not display upgrade message.

- This menu cannot be selected when “Allow Update” is set to “Off”.

Add New Feature

Display new features that can be downloaded to this unit and perform an upgrade.

Upgrade Package:	Display the items to be upgraded.
Upgrade Status:	Display a list of the additional functions provided by the upgrade.
Upgrade:	Execute the upgrade process. When the upgrade starts, the menu screen is shut down. During the upgrade, the amount of upgrade time which has elapsed is displayed.

- Information regarding the “Update” function and “Add New Feature” will be announced on the Marantz website each time related plans are defined. See the Marantz website for details about upgrades.
- When the procedure is complete, “Registered” is displayed in this menu and upgrades can be carried out. If the procedure has not been carried out, “-------” is displayed.
  The ID number shown on this screen is needed when carrying out the procedure.
  The ID number can also be displayed by pressing and holding the main unit’s STATUS and SOUND MODE for at least 3 seconds.
- If the upgrade is not successful, “Upgrade Error” message appears in the display. See “Troubleshooting” – “Update/upgrade error messages” for information on upgrade error messages. (☞ p. 246)
  Check the settings and network environment and then perform the upgrade again.
- This menu cannot be selected when “Allow Update” is set to “Off”.

Notes concerning use of “Update” and “Add New Feature”

- In order to use these functions, you must have the correct system requirements and settings for an Internet connection. (☞ p. 65)
- Do not turn off the power until updating or upgrading is completed.
- Approximately 1 hour is required for the updating/upgrading procedure to be completed.
- Once updating/upgrade starts, normal operations on this unit cannot be performed until updating/upgrading is completed. Furthermore, there may be cases where backup data is reset for the parameters, etc., set on this unit.
- If the update or upgrade fails, press and hold the ⏻ on the main unit for more than 5 seconds, or remove and re-insert the power cord. After about 1 minute, “Please wait” appears on the display and update restarts. If the error continues, check the network environment.

Information

Show information about this unit settings, input signals, etc.

Audio

Show the audio information for MAIN ZONE.

Sound Mode:	The currently set sound mode.
Input Signal:	The input signal type.
Format:	The number of input signal channels (presence of front, surround, LFE).
Sample Rate:	The input signal's sampling frequency.
Offset:	The dialogue normalization correction value.
Flag:	This is displayed when inputting signals including a surround back channel. "MATRIX" is displayed with DTS-ES Matrix input signals, "DISCRETE" with DTS-ES Discrete signals.

Video

Show the HDMI input/output signals and HDMI monitor information for MAIN ZONE.

HDMI Signal Info.

Resolution / HDR / Color Space / Pixel Depth

HDMI Monitor

Interface / HDR / Resolutions

ZONE

Show information about current settings.

MAIN ZONE:	This item shows information about settings for MAIN ZONE. The information displayed differs according to the input source.
ZONE2:	This item shows information about settings for ZONE2.

Firmware

Version:	Displays information for the current firmware.
DTS Version:	Displays the current DTS version.

■ Notifications

Displays and sets notifications.

Also, sets whether or not to display the notification when the power is turned on.

Notification Alerts

On (Default)**:**	Notification messages are displayed.
Off:	Notification messages are not displayed.

- Press INFO on the remote control unit to display current source name, volume, sound mode name, and other information at the bottom of the screen.

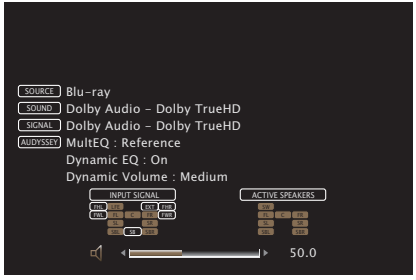

Usage Data

To help us improve our products and customer service, Marantz collects anonymous information about how you use this unit (such as frequently used input sources and sound modes and speaker settings).

Marantz will never provide any information we collect to third parties.

Yes:	Provide information on the operating status of this unit.
No:	Do not provide information on the operating status of this unit.

Save & Load

Save and restore device settings by using a USB memory device.

- Use a USB memory device that has at least 128 MB of free space and is formatted to FAT32. Data may not Save/Load correctly to some USB memory devices.
- It may take up to 10 minutes for data to Save/Load. Do not turn off the power until the process is complete.

Save Configuration

Current unit settings are stored on the USB memory device.

When the settings are saved correctly, “Saved” appears on the display and the file “config.avr” is created on the USB memory device.

- Do not change the file name of the created file. Doing so will prevent the file from being recognized as a settings file when restoring.

Load Configuration

Settings saved on the USB memory device are restored.

When the saved settings are restored correctly, “Loaded” appears on the display and the unit automatically restarts.

Setup Lock

Protect settings from inadvertent changes.

Lock

On:	Turn protection on.
Off (Default)**:**	Turn protection off.

- When cancelling the setting, set “Lock” to “Off”.

NOTE

- When “Lock” is set to “On”, no setting items are displayed except for “Setup Lock”.

Reset

Returns settings to the factory default.

Initialization can be performed for all unit settings or for Network settings only.

■ All Settings

All settings are reset to the factory default values.

■ Network Settings

Only network settings are reset to the factory default values.

- Before returning the settings to the default settings, use the “Save & Load” function from the menu to save and restore the details of various settings configured on the unit. (☞ p. 222)
- The “Reset” operation can also be performed by using the button on the main unit. For details on resetting all of the settings to the factory defaults see “Resetting factory settings” (☞ p. 247), and for details on resetting the network settings to the factory defaults see “Resetting network settings” (☞ p. 248).

NOTE

- Do not disconnect the power or turn the device off during network settings initialization.

Limiting the operating zone with the remote control

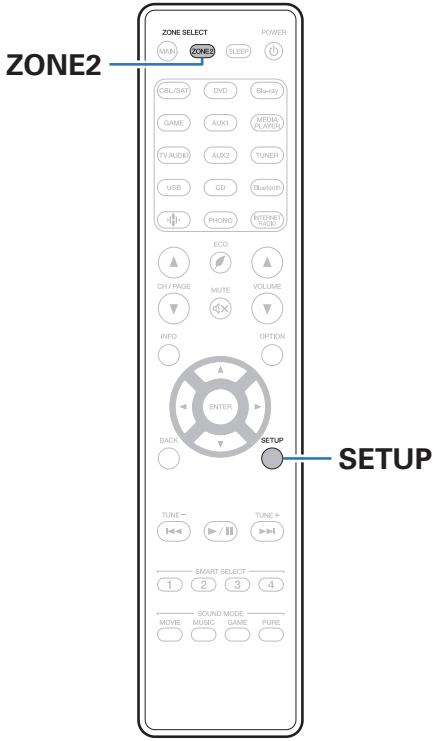

ZONE2 operations can be disabled using the remote control.

1 **Press and hold ZONE2 and SETUP.**

The MAIN and ZONE2 buttons blink.

■ Canceling the settings

1 **Press and hold ZONE2 and SETUP while configuring the setting.**

The MAIN and ZONE2 buttons blink and the setting is canceled.

■ Contents

Tips

I want the volume not to become too loud by mistake 226
I want to keep the volume at the same level when I turn the power on 226
I want to have the subwoofer always output audio 226
I want to make human voices in the movies clearer 226
I want to keep bass and clarity during playback at a lower volume level 226
I want to automatically adjust the volume level difference in content such as TV and movies 226
I want to set the optimized listening environment after changing the configuration/position of the speakers or changing a speaker to a new one 227
I want to combine a desired video with the current music 227
I want to skip unused input sources 227
I want to enjoy the same music in all zones at the home party, etc. 227
I want to minimize the delay in video signals when I'm playing a game on my game console 227
I want to operate this unit using the TV remote control 227

Troubleshooting

Power does not turn on / Power is turned off 229
Operations cannot be performed through the remote control unit 230
Display on this unit shows nothing 230
No sound comes out 231
Desired sound does not come out 232
Sound is interrupted or noise occurs 235
No video is shown on the TV 236
The menu screen is not displayed on the TV 238
The color of the menu screen and operations content displayed on the television is different from normal 238
AirPlay cannot be played back 239
USB memory devices cannot be played back 240
Bluetooth cannot be played back 241
The Internet radio cannot be played back 242
Music files on PC or NAS cannot be played back 243
Various online services cannot be played 244
The HDMI Control function does not work 244
Cannot connect to a wireless LAN network 245
Update/upgrade error messages 246

Tips

I want the volume not to become too loud by mistake

- Set the volume upper limit for “Volume Limit” in the menu beforehand. This prevents children or others from increasing the volume too much by mistake. You can set this for each zone. (“ Volume ” (☞ p. 159), “ Volume Limit ” (☞ p. 214))

I want to keep the volume at the same level when I turn the power on

- By default, the volume setting when power was previously set to standby on this unit is applied at next power on with no change. To use a fixed volume level, set the volume level at power on for “Power On Volume” in the menu. You can set this for each zone. (“ Volume ” (☞ p. 159), “ Power On Volume ” (☞ p. 215))

I want to have the subwoofer always output audio

- Depending on the input signals and sound mode, the subwoofer may not output audio. When “Subwoofer Mode” in the menu is set to “LFE+Main”, you can have the subwoofer always output audio. (☞ p. 200)

I want to make human voices in the movies clearer

- Use “Center Level Adjust” in the menu to adjust the level. (☞ p. 153)

I want to keep bass and clarity during playback at a lower volume level

- Set “Dynamic EQ” in the menu to “On”. This setting corrects the frequency characteristics to allow you to enjoy clear sound without the bass being lost even during playback at a lower volume level. (☞ p. 161)

I want to automatically adjust the volume level difference in content such as TV and movies

- Set “Dynamic Volume” in the menu. Volume level changes (between quiet scenes and loud scenes) in TV shows or movies are automatically adjusted to your desired level. (☞ p. 162)

I want to set the optimized listening environment after changing the configuration/position of the speakers or changing a speaker to a new one

- Perform Audyssey® Setup. This automatically makes the optimized speaker settings for the new listening environment. (☞ p. 181)

I want to combine a desired video with the current music

- Set “Video Select” in the option menu to “On”. You can combine the current music with your desired video source from a Set-top Box or DVD, etc. while listening to music from the Tuner, CD, Phono, HEOS Music, USB or Bluetooth. (☞ p. 116)

I want to skip unused input sources

- Set unused input sources for “Hide Sources” in the menu. This allows you to skip unused input sources when turning the INPUT SELECTOR knob on this unit. (☞ p. 180)

I want to enjoy the same music in all zones at the home party, etc.

- Set “All Zone Stereo” in the option menu to “Start”. You can simultaneously play back music in another room (ZONE2) that is played back in MAIN ZONE. (☞ p. 118)

I want to minimize the delay in video signals when I’m playing a game on my game console

- When the video is delayed against button operations with the controller on the game console, set “Video Mode” in the menu to “Game”. (☞ p. 171)

I want to operate this unit using the TV remote control

- Select “AV Receiver” in a TV menu such as “Input”* or “Operate Connected HDMI Device”*. The Smart Menu of this unit is displayed on the TV. This Smart Menu can be operated using the remote control of your TV.

* The selection method differs depending on your TV. See the owner's manual of your TV for details.

Troubleshooting

If a problem should arise, first check the following:

1. **Are the connections correct?**
2. **Is the set being operated as described in the owner's manual?**
3. **Are the other devices operating properly?**

- If steps 1 to 3 above do not improve the problem, restarting the device may improve the problem.
  Continue pressing the ⏻ button on the unit until "Restart" appears in the display, or remove and re-insert the power cord of the unit.

If this unit does not operate properly, check the corresponding symptoms in this section.
If the symptoms do not match any of those described here, consult your dealer as it could be due to a fault in this unit. In this case, disconnect the power immediately and contact the store where you purchased this unit.

Power does not turn on / Power is turned off

Power does not turn on.

- Check whether the power plug is correctly inserted into the power outlet. (☞ p. 69)

Power automatically turns off.

- The sleep timer is set. Turn on the power again. (☞ p. 134)
- “Auto Standby” is set. “Auto Standby” is triggered when there is no operation for a set amount of time. To disable “Auto Standby”, set “Auto Standby” on the menu to “Off”. (☞ p. 213)

Power turns off and the power indicator flashes in red approx. every 2 seconds.

- The protection circuit has been activated due to a rise in temperature within this unit. Turn the power off, wait about an hour until this unit cools down sufficiently, and then turn the power on again. (☞ p. 274)
- Please re-install this unit in a place having good ventilation.

Power turns off and the power indicator flashes in red approx. every 0.5 seconds.

- Check the speaker connections. The protection circuit may have been activated because speaker cable core wires came in contact with each other or a core wire was disconnected from the connector and came in contact with the rear panel of this unit. After unplugging the power cord, take corrective action such as firmly re-twisting the core wire or taking care of the connector, and then reconnect the wire. (☞ p. 37)
- Turn down the volume and turn on the power again. (☞ p. 71)
- This unit’s amplifier circuit has failed. Unplug the power cord and contact our customer service center.

Power does not turn off even when the power button is pressed, and the display shows “ZONE2 On”.

- The power supply of ZONE2 is turned to ON. To turn off the power supply of this unit (standby), press the ZONE2 ON/OFF on the main unit, or press the POWER ⏻ button after pressing the ZONE2 button on the remote control unit to turn off the power supply of ZONE2.

Operations cannot be performed through the remote control unit

Operations cannot be performed through the remote control unit.

- Batteries are worn out. Replace with new batteries. (☞ p. 10)
- Operate the remote control unit within a distance of about 7 m from this unit and at an angle of within 30°. (☞ p. 10)
- Remove any obstacle between this unit and the remote control unit.
- Insert the batteries in the proper direction, checking the ⊕ and ⊖ marks. (☞ p. 10)
- The set's remote control sensor is exposed to strong light (direct sunlight, inverter type fluorescent bulb light, etc.). Move the set to a place in which the remote control sensor will not be exposed to strong light.
- The operation target zone does not correspond to the zone setting specified on the remote control unit. Press the MAIN or ZONE2 button to select the operating zone of the remote control. (☞ p. 152)
- When using a 3D video device, the remote control unit of this unit may not function due to effects of infrared communications between units (such as TV and glasses for 3D viewing). In this case, adjust the direction of units with the 3D communications function and their distance to ensure they do not affect operations from the remote control unit of this unit.

Display on this unit shows nothing

Display is off.

- Set "Dimmer" on the menu to something other than "Off". (☞ p. 216)
- When the sound mode is set to "Pure Direct", the display is off. (☞ p. 121)

No sound comes out

No sound comes out of speakers.

- Check the connections for all devices. (☞ p. 37)
- Insert connection cables all the way in.
- Check that input connectors and output connectors are not reversely connected.
- Check cables for damage.
- Check that speaker cables are properly connected. Check that cable core wires come in contact with the metal part on speaker terminals. (☞ p. 37)
- Securely tighten the speaker terminals. Check speaker terminals for looseness. (☞ p. 37)
- Check that a proper input source is selected. (☞ p. 71)
- Adjust the volume. (☞ p. 72)
- Cancel the mute mode. (☞ p. 72)
- Check the digital audio input connector setting. (☞ p. 177)
- Check the digital audio output setting on the connected device. On some devices, the digital audio output is set to off by default.
- When a headphone is plugged into the PHONES jack on the main unit, sound is not output from the speaker terminal and PRE OUT connector.

No sound comes out when using the DVI-D connection.

- When this unit is connected to a device equipped with a DVI-D connector, no sound is output. Make a separate audio connection.

Desired sound does not come out

The volume does not increase.

- The maximum volume is set too low. Set the maximum volume using “Limit” on the menu. (☞ p. 159)
- Appropriate volume correction processing is performed according to the input audio format and settings, so the volume may not reach the upper limit.

No sound comes out with the HDMI connection.

- Check the connection of the HDMI connectors. (☞ p. 53)
- When outputting HDMI audio from the speakers, set “HDMI Audio Out” on the menu to “AVR”. To output from the TV, set “TV”. (☞ p. 166)
- When using the HDMI Control function, check that the audio output is set to the AV amplifier on the TV. (☞ p. 131)

When an eARC function-compatible television is connected, television audio is not output from the speaker connected to this unit

- eARC function settings may be required depending on the eARC function-compatible television you are using. Make sure eARC is set to on if this setting exists on your television. For more information, check your television’s owner’s manual.
- Make sure the input source of this unit is “TV Audio”.
- The eARC function does not operate when the HDMI input connector is set to the “TV Audio” input source. To enable eARC function operation, remove the HDMI input connector setting, then restart this unit and the television. (☞ p. 178)

No sound comes out of a specific speaker.

- Check that speaker cables are properly connected.
- Check that a selection other than “None” is set for the “Speaker Config.” setting in menu. (☞ p. 192)
- Check the “Assign Mode” setting in the menu. (☞ p. 191)
- When the sound mode is “Stereo” and “Virtual”, audio is only output from the front speakers and subwoofer.
- Audio is not output from the surround back speaker if “Speaker Virtualizer” is set to “On” when “Speaker Config.” - “Surr. Back” is set to “1 spkr” in the menu. (☞ p. 156)

No sound is produced from subwoofer.

- Check the subwoofer connections.
- Turn on the subwoofer's power.
- Set "Speaker Config." – "Subwoofer" on the menu to "Yes". (☞ p. 193)
- When "Speaker Config." - "Front" in the menu is set to "Large", depending on the input signal and the sound mode, no sound may be output from the subwoofer. (☞ p. 193)
- When no subwoofer audio signal (LFE) is included in the input signals, no sound may be output from the subwoofer. (☞ p. 200)
- You can make the subwoofer always output sound by setting the "Subwoofer Mode" to "LFE+Main". (☞ p. 200)

DTS sound is not output.

- Check that the digital audio output setting on the connected device is set to "DTS".

Dolby Atmos, Dolby TrueHD, DTS-HD, Dolby Digital Plus audio is not output.

- Make HDMI connections. (☞ p. 58)
- Check the digital audio output setting on the connected device. On some devices, "PCM" is set by default.

DTS Neural:X mode cannot be selected.

- DTS Neural:X cannot be selected when using the headphones.

Dolby Surround mode cannot be selected.

- Dolby Surround cannot be selected when using the headphones.

Sound modes other than "Stereo" or "Direct" cannot be selected.

- Only "Stereo" or "Direct" can be selected for the sound mode if Headphone:X signals are input.

Audyssey MultEQ®, Audyssey Dynamic EQ® and Audyssey Dynamic Volume® cannot be selected.

- These cannot be selected when you have not performed Audyssey® Setup. (☞ p. 181)
- Switch to a sound mode other than “Direct” or “Pure Direct”. (☞ p. 121)
- These cannot be selected when sound mode is “DTS Virtual:X” or sound mode that have “+Virtual:X” in the sound mode name.
- These cannot be selected when using the headphones.

“M-DAX” cannot be selected.

- Check that an analog signal or PCM signal (Sample Rate = 44.1/48 kHz) is input. For playback of multichannel signals such as Dolby Digital or DTS surround, “M-DAX” cannot be used. (☞ p. 157)
- Switch to a sound mode other than “Direct” or “Pure Direct”. (☞ p. 121)

No sound is output when using ZONE2.

- Digital signal audio input from the HDMI connector or digital audio connectors (OPTICAL/COAXIAL) cannot be played back. Use analog connections.
- When listening to audio from a Bluetooth device in ZONE2, remove any obstructions between the Bluetooth device and this unit and use it within a range of about 30 m.

Sound is interrupted or noise occurs

During playback from the Internet radio or USB memory device, sound is occasionally interrupted.

- When the transfer speed of the USB memory device is slow, sound may occasionally be interrupted.
- The network communication speed is slow or the radio station is busy.

When making a call on iPhone, noise occurs in audio output on this unit.

- When making a call, keep a distance of 20 cm or longer between iPhone and this unit.

Noise often occurs in FM/AM broadcasting.

- Change the antenna orientation or position. (☞ p. 63)
- Separate the AM loop antenna from the unit.
- Use an outdoor antenna. (☞ p. 63)
- Separate the antenna from other connection cables. (☞ p. 63)

The sounds appear to be distorted.

- Lower the volume. (☞ p. 72)
- Set “Off” to the “ECO Mode”. When “On” or “Auto” is in the “ECO Mode”, the audio may by distorted when the playback volume is high. (☞ p. 210)

Sound cuts out when using Wi-Fi connection.

- The frequency band used by the wireless LAN is also used by microwave ovens, cordless telephones, wireless game controllers and other wireless LAN devices. Using such devices at the same time as this unit may cause sound to cut out due to electronic interference. Sound cut out can be improved using the following methods. (☞ p. 65)
  - Install devices that cause interference away from this unit.
  - Turn off the power supply to devices that cause interference.
  - Change the settings of the router channel to which this unit is connected to. (See the instruction manual of the wireless router for details on how to change the channel.)
  - Switch to a wired LAN connection.
- Particularly when you play back large music files, depending on your wireless LAN environment, the playback sound may be interrupted. In this case, make the wired LAN connection. (☞ p. 203)

No video is shown on the TV

No picture appears.

- Check the connections for all devices. (☞ p. 53)
- Insert connection cables all the way in.
- Check that input connectors and output connectors are not reversely connected.
- Check cables for damage.
- Match the input settings to the input connector of the TV connected to this unit. (☞ p. 177)
- Check that the proper input source is selected. (☞ p. 71)
- Check the video input connector setting. (☞ p. 177)
- Check that the resolution of the player corresponds to that of the TV. (☞ p. 220)
- Check whether the TV is compatible with copyright protection (HDCP). If connected to a device not compatible with HDCP, video will not be output correctly. (☞ p. 251)
- To enjoy content that is copyright protected by HDCP 2.2 or HDCP 2.3, use a playback device and TV compatible with HDCP 2.2 or HDCP 2.3.
- To play back a 4K video, use a “High Speed HDMI Cable” or an “High Speed HDMI Cable with Ethernet”. In order to achieve a higher fidelity for 4K videos, it is recommended to use a “Premium High Speed HDMI Cables” or an “Premium High Speed HDMI Cables with Ethernet” that has an HDMI Premium Certified Cable label on the product package.

No video is shown on the TV with the DVI-D connection.

- With the DVI-D connection, on some device combinations, devices may not function properly due to the copy guard copyright protection (HDCP). (☞ p. 251)

While the menu is being displayed, no video is shown on the TV.

- The video being played will not appear in the background of the menu when the menu is operated during playback of the following video signals.
  - Some images of 3D video contents
  - Computer resolution images (example: VGA)
  - Video with an aspect ratio other than 16:9 or 4:3
  - 4K video
  - Some kind of HDR signals

The menu screen is not displayed on the TV

The menu screen or status information screen is not displayed on the TV.

- The menu screen is only displayed on this unit and a TV connected with an HDMI cable. If this unit is connected to a TV using a different video output connector, operate while watching the display on this unit.
- The status information will not appear on the TV when the following video signals are being played.
  - Some images of 3D video content
  - Computer resolution images (example: VGA)
  - Video with an aspect ratio other than 16:9 or 4:3
  - Some kind of HDR signals
- When a 2D video is converted to a 3D video on the TV, the menu screen or status information screen is not displayed properly. (☞ p. 221)
- In the pure direct playback mode, the menu screen or status information is not displayed. Switch to a sound mode other than the pure direct mode. (☞ p. 120)
- Set the “TV Format” setting in the menu to a selection that is appropriate for the TV. (☞ p. 176)

The color of the menu screen and operations content displayed on the television is different from normal

The color of the menu screen and operations content displayed on the television is different.

- Performing operations on this unit during playback of a Dolby Vision signal may cause variance in the color display of the menu screen and operations content. This is a characteristic of the Dolby Vision signal and is not a malfunction.

AirPlay cannot be played back

The AirPlay icon is not displayed on iTunes / iPhone / iPod touch / iPad.

- This unit and PC / iPhone / iPod touch / iPad are not connected to the same network (LAN). Connect it to the same LAN as this unit. (☞ p. 65)
- The firmware on iTunes / iPhone / iPod touch / iPad is not compatible with AirPlay. Update the firmware to the latest version.

Audio is not output.

- The volume on iTunes / iPhone / iPod touch / iPad is set to the minimum level. The volume on iTunes / iPhone / iPod touch / iPad is linked with the volume on this unit. Set a proper volume level.
- The AirPlay playback is not performed, or this unit is not selected. Click the AirPlay icon on the iTunes / iPhone / iPod touch / iPad screen and select this unit. (☞ p. 108)

Audio is interrupted during the AirPlay playback on iPhone / iPod touch / iPad.

- Quit the application running in the background of the iPhone/iPod touch/iPad, and then play using AirPlay.
- Some external factors may be affecting the wireless connection. Modify the network environment by taking measures such as shortening the distance from the wireless LAN access point.

iTunes cannot be played back through the remote control unit.

- Enable the “Allow iTunes audio control from remote speakers” setting on iTunes. Then, you can perform playback, pause, and skip operations through the remote control unit.

USB memory devices cannot be played back

USB memory device is not recognized.

- Disconnect and reconnect the USB memory device. (☞ p. 62)
- Mass storage class compatible USB memory devices are supported.
- This unit does not support a connection through a USB hub. Connect the USB memory device directly to the USB port.
- The USB memory device must be formatted to “FAT32” or “NTFS”.
- Not all USB memory devices are guaranteed to work. Some USB memory devices are not recognized. When using a type of portable hard disc drive compatible with the USB connection that requires power from an AC adapter, use the AC adapter that came with the drive.

Files on the USB memory device are not displayed.

- Files of a type not supported by this unit are not displayed. (☞ p. 73)
- This unit is able to display files in a maximum of eight folder layers. A maximum of 5000 files (folders) can also be displayed for each layer. Modify the folder structure of the USB memory device.
- When multiple partitions exist on the USB memory device, only files on the first partition are displayed.

iOS and Android devices are not recognized.

- The USB port of this unit does not support playback from iOS and Android devices.

Files on a USB memory device cannot be played.

- Files are created in a format that is not supported by this unit. Check the formats supported by this unit. (☞ p. 254)
- You are attempting to play a file that is copyright protected. Files that are copyright protected cannot be played on this unit.
- Playback may not be possible if the album art file size exceeds 2 MB.

Bluetooth cannot be played back

Bluetooth devices cannot be connected to this unit.

- The Bluetooth function in the Bluetooth device has not been enabled. See the Owner's Manual of the Bluetooth device to enable the Bluetooth function.
- Bring the Bluetooth device near to this unit.
- The Bluetooth device cannot connect with this unit if it is not compatible with the A2DP profile.
- Turn the power of the Bluetooth device off and on again, and then try again.

The sound is cut off.

- Bring the Bluetooth device near to this unit.
- Remove obstructions between the Bluetooth device and this unit.
- To prevent electromagnetic interference, locate this unit away from microwave ovens, wireless LAN devices and other Bluetooth devices.
- Reconnect the Bluetooth device.

The Internet radio cannot be played back

A list of broadcasting stations is not displayed.

- The LAN cable is not properly connected, or the network is disconnected. Check the connection status. (☞ p. 65)
- Perform the network diagnostic mode.

Internet Radio cannot be played.

- The selected radio station is broadcasting in a format that is not supported by this unit. Formats that can be played back in this unit are MP3, WMA and AAC. (☞ p. 257)
- The firewall function is enabled on the router. Check the firewall setting.
- The IP address is not properly set. (☞ p. 205)
- Check the power of the router is on.
- To obtain the IP address automatically, enable the DHCP server function on the router. Also, set the DHCP setting to “On” on this unit. (☞ p. 205)
- To obtain the IP address manually, set the IP address on this unit. (☞ p. 205)
- Some radio stations broadcast silently during some time period. In this case, no audio is output. Wait for a while and select the same radio station, or select another radio station. (☞ p. 93)
- The selected radio station is not in service. Select a radio station in service.

Cannot connect to favorite radio stations.

- Radio station is not currently in service. Register radio stations in service.

Music files on PC or NAS cannot be played back

Files stored on a computer cannot be played.

- Files are stored in a non-compatible format. Record in a compatible format. (☞ p. 256)
- Files that are copyright protected cannot be played on this unit.
- The USB port of this unit cannot be used for connection to a computer.
- Media sharing settings on the server or NAS do not allow this unit. Change the settings to allow this unit. For details, see the owner's manual of the server or NAS.

Server is not found, or it is not possible to connect to the server.

- The computer's or router's firewall is activated. Check the computer's or router's firewall settings.
- Computer's power is not turned on. Turn on the power.
- Server is not running. Launch the server.
- IP address of this unit is wrong. Check the IP address of this unit. (☞ p. 202)

Music files on PC cannot be played back.

- Even if PC is connected to the USB port on this unit, music files on it cannot be played back. Connect PC to this unit through the network. (☞ p. 65)

Files on PC or NAS are not displayed.

- Files of a type not supported by this unit are not displayed. (☞ p. 256)

Music stored on a NAS cannot be played.

- If you use a NAS in conformity with the DLNA standard, enable the DLNA server function in the NAS setting.
- If you use a NAS that does not conform with the DLNA standard, play the music via a PC. Set Windows Media Player's media sharing function and add NAS to the selected play folder.
- If connection is restricted, set audio equipment as the connection target.

Various online services cannot be played

Various online services cannot be played.

- The online service may have been discontinued.

The HDMI Control function does not work

The HDMI Control function does not work.

- Check that “HDMI Control” in the menu is set to “On”. (☞ p. 168)
- You cannot operate devices that are not compatible with the HDMI Control function. In addition, depending on the connected device or the settings, the HDMI Control function may not work. In this case, operate the external device directly. (☞ p. 131)
- Check that the HDMI Control function setting is enabled on all devices connected to this unit. (☞ p. 131)
- When you make connection related changes such as connecting an additional HDMI device, the link operation settings may be initialized. Turn off this unit and devices connected via HDMI, and turn them on again. (☞ p. 131)

Cannot connect to a wireless LAN network

Cannot connect to the network.

- The network name (SSID), password and encryption setting have not been set up correctly. Configure the network settings according to the setting details of this unit. (☞ p. 204)
- Shorten the distance from the wireless LAN access point and remove any obstructions to improve access first before re-connecting again. Place the unit away from microwave ovens and other network access points.
- Configure the access point channel settings away from channels that are being used by other networks.
- This unit is not compatible with WEP (TSN).

Cannot connect to a WPS Router.

- Check that the WPS mode of the router is operating.
- Press the WPS button on the router and then press the “Connect” button displayed on the TV within 2 minutes.
- A router/settings that are compatible with WPS 2.0 standards are required. Set the encryption time to “None”, “WPA-PSK (AES)” or WPA2-PSK (AES). (☞ p. 204)
- If the router encryption method is WEP/WPA-TKIP/WPA2-TKIP, you cannot connect by using the WPS button on the router. In this case, use the “Scan Networks” or “Manual” method to connect.

Cannot connect to the network using iPhone/iPod touch/iPad.

- Update the iPhone/iPod touch/iPad firmware to the latest version.
- When configuring the settings via a wireless connection, iOS 7 or later needs to be supported.

Update/upgrade error messages

If an update/upgrade is interrupted or fails, an error message appears.

Display	Description
Connection failed. Please check your network, then try again.	The network connection is unstable. Connection to the server failed. Check your network environment and try the update again.
Update failed. Please check your network, then try again.	The download of the firmware failed. Check your network environment and try the update again.
Upgrade failed. Please check your network, then try again.	The download of the firmware failed. Check your network environment and try the upgrade again.
Please check your network, unplug and reconnect the power cord, and try again.	The update failed. Press and hold the ⏻ on the main unit for more than 5 seconds, or remove and re-insert the power cord. The update restarts automatically.
Please contact customer service in your area.	This unit may be broken. Contact our Customer Service Center in your area.

Resetting factory settings

If the indicators are incorrect or the unit cannot be operated, restarting the unit may improve the problem. We recommend restarting the unit before returning the settings to the default settings. (☞ p. 228)

If the operations are not improved by restarting the unit, follow the steps below.

Various settings are reset to the factory default values. Make settings again.

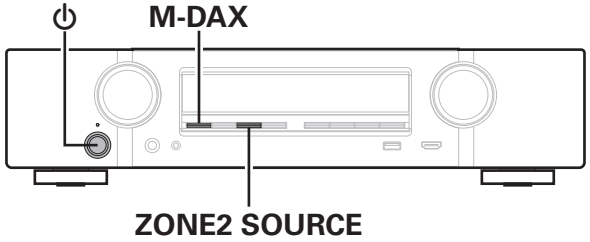

1 **Turn off the power using ⏻.**

2 **Press ⏻ while simultaneously pressing M-DAX and ZONE2 SOURCE.**

3 **Remove your fingers from the two buttons when “Initialized” appears on the display.**

- Before returning the settings to the default settings, use the “Save & Load” function from the menu to save and restore the details of various settings configured on the unit. (☞ p. 222)
- You can also reset all settings to the factory defaults using “Reset” - “All Settings” in the menu. (☞ p. 223)

Resetting network settings

If network contents cannot be played or the unit cannot connect to the network, restarting the unit may improve the problem. We recommend restarting the unit before returning the settings to the default settings. (☞ p. 228)

If the operations are not improved by restarting the unit, follow the steps below.

Network settings are reset to the factory default values. Make settings again.

However, the menu “Amp Assign”, “Speaker Config.” and “Video” settings are not reset.

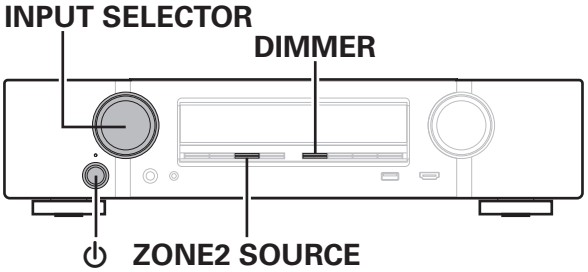

1. **Press ⏻ to turn on power to the unit.**
2. **Turn INPUT SELECTOR to select “HEOS Music”.**
3. **Press and hold the main unit's ZONE2 SOURCE and DIMMER at the same time for at least 3 seconds.**
4. **Remove your fingers from the two buttons when “Network Reset...” appears on the display.**
5. **“Completed” is shown in the display when reset is complete.**

- Before returning the settings to the default settings, use the “Save & Load” function from the menu to save and restore the details of various settings configured on the unit. (☞ p. 222)
- You can also reset the network settings to the factory defaults using “Reset” - “Network Settings” in the menu. (☞ p. 223)

NOTE

- Do not turn the power off until reset is complete.

About HDMI

HDMI is an abbreviation of High-Definition Multimedia Interface, which is an AV digital interface that can be connected to a TV or amplifier.

With the HDMI connection, high definition video and high quality audio formats adopted by Blu-ray Disc players (Dolby Digital Plus, Dolby TrueHD, DTS-HD, DTS-HD Master Audio) can be transmitted, which is not possible with the analog video transmission.

Furthermore, in the HDMI connection, audio and video signals can be transmitted through a single HDMI cable, while in conventional connections it is necessary to provide audio and video cables separately for connection between devices. This allows you to simplify the wiring configuration that tends to be quite complex in a home theater system.

This unit supports the following HDMI functions.

- **Deep Color**

  An imaging technology supported by HDMI. Unlike RGB or YCbCr, which uses 8 bits (256 shades) per color, it can use 10 bits (1024 shades), 12 bits (4096 shades), or 16 bits (65536 shades) to produce colors in higher definition.

  Both devices linked via HDMI must support Deep Color.

- **x.v.Color**

  This function lets HDTVs display colors more accurately. It enables display with natural, vivid colors.

  “x.v.Color” is trademark of Sony Corporation.

- **3D**

  This unit supports input and output of 3D (3 dimensional) video signals of HDMI. To play back 3D video, you need a TV and player that provide support for the HDMI 3D function and a pair of 3D glasses.

- **4K**

  This unit supports input and output of 4K (3840 x 2160 pixels) video signals of HDMI.

- **Content Type**

  It automatically makes settings suitable for the video output type (content information).

- **Adobe RGB color, Adobe YCC601 color**

  The color space defined by Adobe Systems Inc. Because it is a wider color space than RGB, it can produce more vivid and natural images.

- **sYCC601 color**

  Each of these color spaces defines a palette of available colors that is larger than the traditional RGB color model.

- **ALLM (Auto Low Latency Mode)**

  This unit automatically switches to low latency mode depending on playback contents when using a combination of television and game console compatible with the ALLM function.

- **Auto Lip Sync**
  This function can automatically correct delay between the audio and video.
  Use a TV that is compatible with the Auto Lip Sync function.
- **HDMI Pass Through**
  Even when the power to this unit is set to standby, signals input from the HDMI input connector are output to a TV or other device that is connected to the HDMI output connector.
- **HDMI Control**
  If you connect the unit and an HDMI Control function compatible TV or player with an HDMI cable and then enable the HDMI Control function setting on each device, the devices will be able to control each other.
  - Power off link
    This unit power off can be linked to the TV power off step.
  - Audio output destination switching
    From the TV, you can switch whether to output audio from the TV or the AV amplifier.
  - Volume adjustment
    You can adjust this unit's volume in the TV volume adjustment operation.
  - Input source switching
    You can switch this unit input sources through linkage to TV input switching.
    When playing the player, this unit input source switches to the source for that player.
- **ARC (Audio Return Channel)**
  This function transmits audio signals from the TV to this unit through the HDMI cable and plays back the audio from the TV on this unit based on the HDMI Control function.
  If a TV without the ARC function is connected via HDMI connections, video signals of the playback device connected to this unit are transmitted to the TV, but this unit can not play back the audio from the TV. If you want to enjoy surround audio for TV program, a separate audio cable connection is required.
  In contrast, if a TV with the ARC function is connected via HDMI connections, no audio cable connection is required. Audio signals from the TV can be input to this unit through the HDMI cable between this unit and the TV. This function allows you to enjoy surround playback on this unit for the TV.
- **eARC (Enhanced Audio Return Channel)**
  The eARC function is an extension of the conventional ARC function. It utilizes dedicated eARC function control to play back television audio from this unit without passing through HDMI control. Furthermore, the eARC function can transmit multichannel linear PCM, Dolby TrueHD, Dolby Atmos, DTS-HD Master Audio, DTS:X and other audio formats not compatible with conventional ARC. Connecting to an eARC function-compatible television also enables enjoyment of higher-quality surround playback of the audio content played from your television.

Supported audio formats

2-channel Linear PCM	2-channel, 32 kHz – 192 kHz, 16/20/24 bit
Multi-channel Linear PCM	7.1-channel, 32 kHz – 192 kHz, 16/20/24 bit
Bitstream	Dolby Digital / DTS / Dolby Atmos / Dolby TrueHD / Dolby Digital Plus / DTS:X / DTS-HD Master Audio / DTS-HD High Resolution Audio / DTS Express

Supported video signals

- 480i
- 576i
- 720p 60/50Hz
- 1080p 60/50/24Hz
- 480p
- 576p
- 1080i 60/50Hz
- 4K 60/50/30/25/24 Hz

Copyright protection system
In order to play back digital video and audio such as BD video or DVD video via HDMI connection, both this unit and the TV or player must to support the copyright protection system known as HDCP (High-bandwidth Digital Content Protection System). HDCP is copyright protection technology comprised of data encryption and authentication of the connected AV devices. This unit supports HDCP. • If a device that does not support HDCP is connected, video and audio are not output correctly. Read the owner's manual of your television or player for more information.

- When connecting this unit to a device that is compatible with the Deep Color, 4K, ARC and eARC functions, use a "High Speed HDMI cable with Ethernet" that bears the HDMI logo.

Relationship between video signals and monitor output

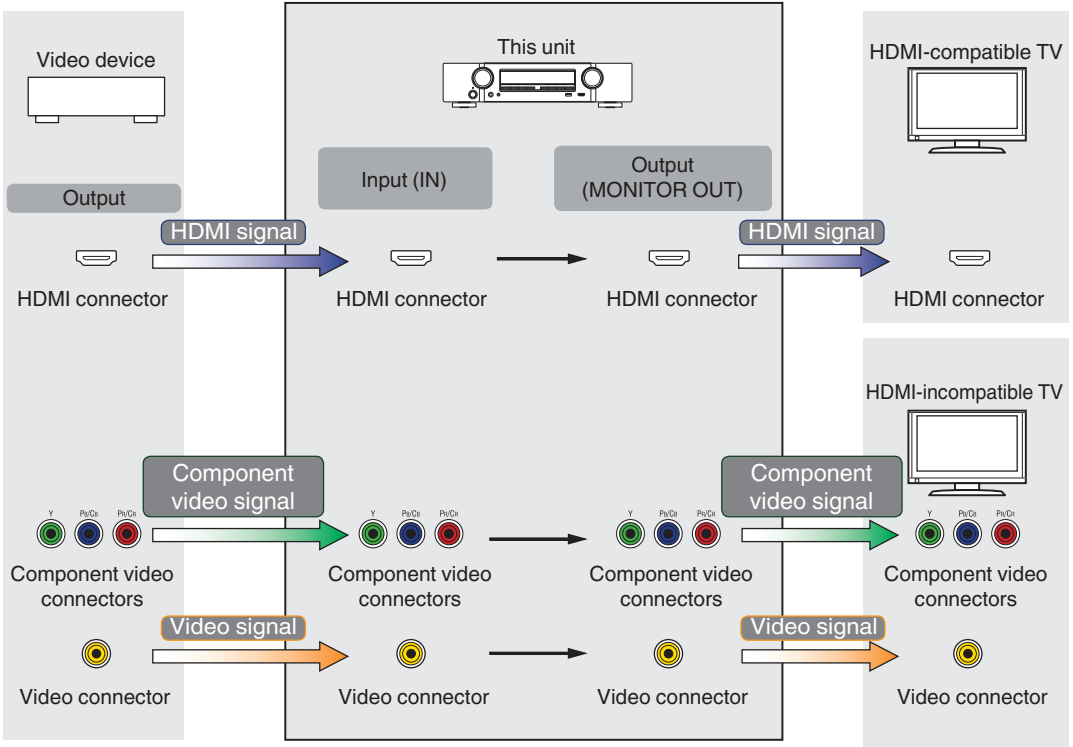

This unit can convert the input video signals to the resolution that is set for “Resolution” in the menu before outputting them to the TV. (☞ p. 172)

Input signal \ Output signal		HDMI							
		480i/576i	480p/576p	720p	1080i	1080p	1080p 24Hz	4K 30/25/24Hz	4K 60/50Hz
HDMI	480i/576i	✓	✓	✓	✓	✓	✓	✓	
	480p/576p		✓	✓	✓	✓	✓	✓	
	720p			✓	✓	✓	✓	✓	
	1080i			✓	✓	✓	✓	✓	
	1080p 24Hz					✓	✓	✓	
	1080p					✓	✓	✓	
	4K 30/25/24Hz							✓	
	4K 60/50Hz								✓ *

* The HDMI connector on the front panel supports YCbCr 4:2:0 format only.

Playing back a USB memory devices

- This unit is compatible with MP3 ID3-Tag (Ver. 2) standard.
- This unit can show the artwork that was embedded by using MP3 ID3-Tag Ver. 2.3 or 2.4.
- This unit is compatible with WMA META tags.
- If the image size (pixels) of an album artwork exceeds 500 × 500 (WMA/MP3/Apple Lossless/DSD) or 349 × 349 (MPEG-4 AAC), then music may not be played back properly.

■ Compatible formats

	Sampling frequency	Channel	Bit rate	Extension
WMA∗1	32/44.1/48 kHz	2-channel	48 – 192 kbps	.wma
MP3	32/44.1/48 kHz	2-channel	32 – 320 kbps	.mp3
WAV	32/44.1/48/88.2/ 96/176.4/192 kHz	2-channel	–	.wav
MPEG-4 AAC∗1	32/44.1/48 kHz	2-channel	48 - 320 kbps	.aac/.m4a
FLAC	44.1/48/88.2/ 96/176.4/192 kHz	2-channel	–	.flac
Apple Lossless∗2	44.1/48/88.2/ 96/176.4/192 kHz	2-channel	–	.m4a
DSD	2.8/5.6 MHz	2-channel	–	.dsf/.dff

∗1 Only files that are not protected by copyright can be played on this unit.
Content downloaded from pay sites on the Internet are copyright protected. Also, files encoded in WMA format when ripped from a CD, etc. on a computer may be copyright protected, depending on the computer's settings.

∗2 The Apple Lossless Audio Codec (ALAC) decoder is distributed under the Apache License, Version 2.0 (**http://www.apache.org/licenses/LICENSE-2.0**).

■ Maximum number of playable files and folder

The limits on the number of folders and files that can be displayed by this unit are as follows.

Item \ Media	USB memory device
Number of folder directory levels *1	8 levels
Number of folders	500
Number of files*2	5000

*1 The limited number includes the root folder.

*2 The allowable number of files may differ according to the USB memory device capacity and the file size.

Playing back a Bluetooth device

This unit supports the following Bluetooth profile.

- A2DP (Advanced Audio Distribution Profile):
  When a Bluetooth device that supports this standard is connected, monaural and stereo sound data can be streamed at a high quality.
- AVRCP (Audio/Video Remote Control Profile):
  When a Bluetooth device that supports this standard is connected, the Bluetooth device can be operated from this unit.

■ About Bluetooth communications

Radio waves broadcast from this unit may interfere with the operation of medical devices. Make sure you turn off the power of this unit and Bluetooth device in the following locations as radio wave interference may cause malfunctions.

- Hospitals, trains, aircraft, petrol kiosks and places where flammable gases are generated
- Near automatic doors and fire alarms

Playing back a file saved on a PC or NAS

- This unit is compatible with MP3 ID3-Tag (Ver. 2) standard.
- This unit can show the artwork that was embedded by using MP3 ID3-Tag Ver. 2.3 or 2.4.
- This unit is compatible with WMA META tags.
- If the image size (pixels) of an album artwork exceeds 500 × 500 (WMA/MP3/WAV/FLAC/Apple Lossless/DSD) or 349 × 349 (MPEG-4 AAC), then music may not be played back properly.
- A server or server software compatible with distribution in the corresponding formats is required to play music files via a network.
  For playing mentioned audio formats via a network a server software, for example Twonky Media Server or jRiver Media Server, needs to be installed on your computer or NAS for full support. There are other server software available too. Please check supported formats.

■ Specifications of supported files

	Sampling frequency	Channel	Bit rate	Extension
WMA*1	32/44.1/48 kHz	2-channel	48 – 192 kbps	.wma
MP3	32/44.1/48 kHz	2-channel	32 – 320 kbps	.mp3
WAV	32/44.1/48/88.2/ 96/176.4/192 kHz	2-channel	–	.wav
MPEG-4 AAC*1	32/44.1/48 kHz	2-channel	48 - 320 kbps	.aac/.m4a
FLAC	44.1/48/88.2/ 96/176.4/192 kHz	2-channel	–	.flac
Apple Lossless*2	44.1/48/88.2/ 96/176.4/192 kHz	2-channel	–	.m4a
DSD	2.8/5.6 MHz	2-channel	–	.dsf/.dff

∗1 Only files that are not protected by copyright can be played on this unit.
Content downloaded from pay sites on the Internet are copyright protected. Also, files encoded in WMA format when ripped from a CD, etc. on a computer may be copyright protected, depending on the computer's settings.

∗2 The Apple Lossless Audio Codec (ALAC) decoder is distributed under the Apache License, Version 2.0 (**http://www.apache.org/licenses/LICENSE-2.0**).

Playing back Internet Radio

■ Playable broadcast station specifications

	Sampling frequency	Bit rate	Extension
WMA	32/44.1/48 kHz	48 – 192 kbps	.wma
MP3	32/44.1/48 kHz	32 – 320 kbps	.mp3
MPEG-4 AAC	32/44.1/48 kHz	48 - 320 kbps	.aac/ .m4a

Personal memory plus function

The most recently used settings (input mode, HDMI output mode, sound mode, tone control, channel level, MultEQ®, Dynamic EQ, Dynamic Volume, M-DAX and audio delay, etc.) are saved for each input source.

- "Surround Parameter" settings are stored for each sound mode.

Last function memory

This function stores the settings which were made before going into the standby mode.

Sound modes and channel output

○ This indicates the audio output channels or surround parameters that can be set.
◎ This indicates the audio output channels. The output channels depend on the settings of “Speaker Config.”. (☞ p. 192)

Sound mode	Channel output									
	Front L/R	Center	Surround L/R	Surround Back L/R	Front Height L/R	Top Front L/R	Top Middle L/R	Front Dolby Atmos Enabled L/R	Surround Dolby Atmos Enabled L/R	Subwoofer
Direct/Pure Direct (2-channel)	○									◎∗5
Direct/Pure Direct (Multi-channel)	○	◎	◎	◎∗4	◎∗4	◎∗4	◎∗4	◎∗4	◎∗4	◎
Stereo	○									◎
Dolby Atmos	○	◎	◎	◎	◎	◎	◎	◎	◎	◎
Dolby TrueHD	○	◎	◎	◎∗4						◎
Dolby Digital Plus	○	◎	◎	◎∗4						◎
Dolby Digital	○	◎	◎							◎
Dolby Surround ∗1	○	◎	◎	◎	◎	◎	◎	◎	◎	◎
DTS:X	○	◎	◎	◎	◎	◎	◎	◎	◎	◎
DTS-HD	○	◎	◎	◎∗4	◎∗4					◎
DTS Express	○	◎	◎	◎						◎
DTS 96/24	○	◎	◎	◎						◎
DTS Surround	○	◎	◎	◎						◎
DTS Neural:X ∗2	○	◎	◎	◎	◎	◎	◎	◎	◎	◎
DTS Virtual:X ∗3	○	◎	◎	◎						◎
Multi Ch In	○	◎	◎	◎∗4						◎
Multi Ch Stereo	○	◎	◎	◎	◎	◎	◎	◎	◎	◎
Virtual	○									◎

∗1 - ∗5 : “Sound modes and channel output” (☞ p. 259)

∗1 The applicable sound mode includes “Dolby Surround” and sound modes that have “+Dolby Surround” in the sound mode name.
∗2 The applicable sound mode includes “DTS Neural:X” and sound modes that have “+Neural:X” in the sound mode name.
∗3 The applicable sound mode includes “DTS Virtual:X” and sound modes that have “+Virtual:X” in the sound mode name.
∗4 A signal for each channel contained in an input signal is output as audio.
∗5 Audio is output when “Subwoofer Mode” in the menu is set to “LFE+Main”. (☞ p. 200)

Sound modes and surround parameters

Sound mode	Surround Parameter							
	Cinema EQ	Loudness Management ∗2	Dynamic Compression ∗3	Dialog Control ∗4	Low Frequency Effects ∗5	Speaker Virtualizer ∗6	DTS Neural:X	Subwoofer
Direct/Pure Direct (2-channel) ∗1		○	○					○∗7
Direct/Pure Direct (Multi-channel) ∗1		○	○	○	○			
Stereo		○	○	○	○			○∗9
Dolby Atmos	○	○	○		○	○		
Dolby TrueHD	○	○	○		○	○∗8		
Dolby Digital Plus	○	○	○		○	○∗8		
Dolby Digital	○	○	○		○	○∗8		
Dolby Surround	○	○	○			○		
DTS:X	○		○	○	○		○	
DTS-HD	○				○	○∗8		
DTS Express	○				○	○∗8		
DTS 96/24	○				○	○∗8		
DTS Surround	○		○		○	○∗8		
DTS Neural:X	○		○					
DTS Virtual:X	○		○					
Multi Ch In	○				○	○∗8		
Multi Ch Stereo	○	○	○	○	○			
Virtual		○	○		○			

∗1 - ∗9 : “Sound modes and surround parameters” (☞ p. 262)

Sound mode	Tone ∗10	Center Level Adjust	Subwoofer Level Adjust ∗11	Audyssey			M-DAX ∗16
				MultEQ® ∗12∗13∗14	Dynamic EQ ∗15	Dynamic Volume ∗15	
Direct/Pure Direct (2-channel) ∗1			○∗7				
Direct/Pure Direct (Multi-channel) ∗1		○	○				
Stereo	○		○∗9	○	○	○	○
Dolby Atmos	○	○	○	○	○	○	
Dolby TrueHD	○	○	○	○	○	○	
Dolby Digital Plus	○	○	○	○	○	○	
Dolby Digital	○	○	○	○	○	○	
Dolby Surround	○	○	○	○	○	○	○
DTS:X	○	○	○	○	○	○	
DTS-HD	○	○	○	○	○	○	
DTS Express	○	○	○	○	○	○	
DTS 96/24	○	○	○	○	○	○	
DTS Surround	○	○	○	○	○	○	
DTS Neural:X	○	○	○	○	○	○	○
DTS Virtual:X	○	○	○				○
Multi Ch In	○	○	○	○	○	○	
Multi Ch Stereo	○	○	○	○	○	○	○
Virtual	○		○	○	○	○	○

∗1, ∗7, ∗9 - ∗16: “Sound modes and surround parameters” (☞ p. 262)

∗1 During playback in Pure Direct mode, the surround parameters are the same as in Direct mode.
∗2 This item can be selected when a Dolby Digital, Dolby Digital Plus, Dolby TrueHD or Dolby Atmos signal is played.
∗3 This item can be selected when a Dolby Digital, Dolby Digital Plus, Dolby TrueHD, Dolby Atmos, DTS:X or DTS signal is played.
∗4 This item can be selected when a DTS:X signal that is compatible with the Dialog Control function is input.
∗5 This item can be selected when a Dolby Digital or DTS signal or DVD-Audio is played.
∗6 This feature will be supported via firmware update.
∗7 This setting is available when “Subwoofer Mode” in the menu is set to “LFE+Main”. (☞ p. 200)
∗8 This item can be selected the sound mode that have “+ Dolby Surround” in the sound mode name.
∗9 This item can be set when “Front” is set to “Small” or “Subwoofer Mode” is set to “LFE+Main”. (☞ p. 192, 200)
∗10 This item cannot be set when “Dynamic EQ” is set to “On”. (☞ p. 161)
∗11 This item cannot be set when “Subwoofer” in the menu is set to “No”. (☞ p. 193)
∗12 This item cannot be set when Audyssey® Setup (Speaker Calibration) has not been performed.
∗13 This item cannot be selected when a DTS:X format with a sampling frequency of over 48 kHz is input.
∗14 This item cannot be set when sound mode is “DTS Virtual:X” or sound mode that have “+Virtual:X” in the sound mode name.
∗15 This item cannot be set when “MultEQ®” is set to “Off”. (☞ p. 160)
∗16 This item can be set when the input signal is analog, PCM 48 kHz or 44.1 kHz.

Types of input signals, and corresponding sound modes

● This indicates the default sound mode.
○ This indicates the selectable sound mode.

Sound mode	NOTE	2-channel signal			Multi-channel signal										
		Dolby Digital (+/HD)	DTS (-HD)	Analog / PCM	Dolby Atmos	Dolby TrueHD	Dolby Digital Plus	Dolby Digital (EX)	DTS:X	DTS-HD	DTS Express	DTS ES Dscrt6.1	DTS ES Mtrx6.1	DTS	PCM multi-channel
Direct															
Direct		○	○	○∗2	○	○	○	○	○	○	○	○	○	○	○
Pure Direct															
Pure Direct		○	○	○	○	○	○	○	○	○	○	○	○	○	○
Stereo															
Stereo		○	○	●	○	○	○	○	○	○	○	○	○	○	○
Dolby Surround															
Dolby Atmos	∗1				●										
Dolby TrueHD					○∗3	○									
Dolby Digital Plus					○∗4		○								
Dolby Digital								○							
Dolby (D+) (HD) + Dolby Surround						●	●	●							
Dolby Surround		●	○	○											

∗1 - ∗4 : “Types of input signals, and corresponding sound modes” (☞ p. 265)

Sound mode	NOTE	2-channel signal			Multi-channel signal										
		Dolby Digital (+/HD)	DTS (-HD)	Analog / PCM	Dolby Atmos	Dolby TrueHD	Dolby Digital Plus	Dolby Digital (EX)	DTS:X	DTS-HD	DTS Express	DTS ES Dscrt6.1	DTS ES Mtrx6.1	DTS	PCM multi-channel
DTS Surround															
DTS:X MSTR / DTS:X									●						
DTS-HD MSTR										○∗9					
DTS-HD HI RES										○∗10					
DTS Express											○				
DTS ES Dscrt 6.1	∗5											○			
DTS ES Mtrx 6.1	∗5												○		
DTS 96/24														○∗11	
DTS Surround												○	○	○	
DTS (-HD) + Dolby Surround										○	○	○	○	○	
DTS (-HD) + Neural:X	∗6									●	●	●	●	●	
DTS (-HD) / DTS:X + Virtual:X	∗7								○	○	○	○	○	○	
DTS Neural:X	∗6∗8		●	○											
DTS Virtual:X	∗8		○	○											
Multi Ch In															
Multi Ch In															●
Multi Ch In 7.1	∗5														○∗12
Multi In + Dolby Surround															○
Multi In + Neural:X															○
Multi In + Virtual:X															○
Original sound mode															
Multi Ch Stereo		○	○	○	○	○	○	○	○	○	○	○	○	○	○
Virtual		○	○	○	○∗13	○	○	○		○	○	○	○	○	○

∗5 - ∗13 : “Types of input signals, and corresponding sound modes” (☞ p. 265)

∗1 This item can be selected when using any of the Surround Back, Front Height, Top Front, Top Middle, Front Dolby or Surround Dolby speaker.
∗2 The default sound mode for the AirPlay playback is “Direct”.
∗3 This can be selected when the Dolby Atmos signal contains the Dolby TrueHD signal.
∗4 This can be selected when the Dolby Atmos signal contains the Dolby Digital Plus signal.
∗5 This item can be selected when surround back speakers are used.
∗6 This item cannot be selected when a DTS(-HD) format with a sampling frequency of over 48 kHz is input.
∗7 This item cannot be selected when a DTS:X format with a sampling frequency of over 48 kHz is input.
∗8 This item cannot be selected when the input signal is Dolby Digital, Dolby Digital Plus, Dolby TrueHD or Dolby Atmos.
∗9 This item can be selected when the input signal is DTS-HD Master Audio.
∗10 This item can be selected when the input signal is DTS-HD Hi Resolution.
∗11 This item can be selected when the input signal is DTS 96/24.
∗12 This item can be selected when the input signals contain surround back signals.
∗13 This can be selected when the Dolby Atmos signal contains the Dolby TrueHD or Dolby Digital Plus signal.

Explanation of terms

■ Audyssey

Audyssey Dynamic EQ®

Audyssey Dynamic EQ® solves the problem of deteriorating sound quality as volume is decreased by taking into account human perception and room acoustics.
Audyssey Dynamic EQ® works in tandem with Audyssey MultEQ® to provide well-balanced sound for every listener at any volume level.

Audyssey Dynamic Volume®

Dynamic Volume solves the problem of large variations in volume level between television programs, commercials, and between the soft and loud passages of movies. Audyssey Dynamic EQ® is integrated into Dynamic Volume so that as the playback volume is adjusted automatically, the perceived bass response, tonal balance, surround impression, and dialog clarity remain the same.

Audyssey MultEQ®

Audyssey MultEQ® is a room equalization solution that calibrates any audio system so that it can achieve optimum performance for every listener in a large listening area. Based on several room measurements, MultEQ® calculates an equalization solution that corrects for both time and frequency response problems in the listening area and also performs a fully automated surround system setup.

■ Dolby

Dolby Atmos

Introduced first in the cinema, Dolby Atmos brings a revolutionary sense of dimension and immersion to the Home Theater experience. Dolby Atmos is an adaptable and scalable object based format that reproduces audio as independent sounds (or objects) that can be accurately positioned and move dynamically throughout the 3 dimensional listening space during playback. A key ingredient of Dolby Atmos is the introduction of a height plane of sound above the listener.

Dolby Atmos Stream

Dolby Atmos content will be delivered to your Dolby Atmos Enabled AV receiver via Dolby Digital Plus or Dolby TrueHD on Blu-ray Disc, downloadable files and streaming media. A Dolby Atmos stream contains special metadata that describes the positioning of sounds within the room. This object audio data is decoded by a Dolby Atmos AV receiver and scaled for optimum playback through Home Theater speaker systems of every size and configuration.

Dolby Digital

Dolby Digital is a multi-channel digital signal format developed by Dolby Laboratories.

A total of 5.1-channels are played: 3 front channels (“FL”, “FR” and “C”), 2 surround channels (“SL” and “SR”) and the “LFE” channel for low frequency effects.

Because of this, there is no crosstalk between channels and a realistic sound field with a “three-dimensional” feeling (sense of distance, movement and positioning) is achieved. This delivers a thrilling surround sound experience in the home.

Dolby Digital Plus

Dolby Digital Plus is an improved Dolby Digital signal format that is compatible with up to 7.1-channels of discrete digital sound and also improves sound quality thanks to extra data bit rate performance. It is upwardly compatible with conventional Dolby Digital, so it offers greater flexibility in response to the source signal and the conditions of the playback device.

Dolby Surround

Dolby Surround is a next generation surround technology that intelligently up mixes stereo; 5.1 and 7.1 content for playback through your surround speaker system. Dolby Surround is compatible with traditional speaker layouts, as well as Dolby Atmos enabled playback systems that employ in-ceiling speakers or products with Dolby speaker technology.

Dolby Speaker Technology (Dolby Atmos Enabled speakers)

A convenient alternative to speakers built into the ceiling, Dolby Atmos Enabled speakers employ the ceiling above you as a reflective surface for reproducing audio in the height plane above the listener. These speakers feature a unique upward firing driver and special signal processing. These features can be built into a conventional speaker or standalone speaker module. The features minimally impact the overall speaker footprint while providing an immersive listening experience during Dolby Atmos and Dolby Surround playback.

Dolby TrueHD

Dolby TrueHD is a high definition audio technology developed by Dolby Laboratories, using lossless coding technology to faithfully reproduce the sound of the studio master.

This format provides the facility to support up to 8 audio channels with a sampling frequency of 96 kHz/24 bit resolution and up to 6 audio channels with a sampling frequency of 192 kHz/24 bit resolution.

Speaker Virtualizer

Dolby Atmos height virtualization is a digital signal processing solution that leverages Dolby's deep understanding of human audio perception to create the sensation of overhead sound from the listener-level speakers. This signal processing applies height-cue filters to overhead audio components contained within the audio signal before they are mixed into the listener-level speakers.

These filters simulate the natural spectral cues imparted by our ears to sounds that originate from overhead.

For stereo and 3.1-channel speaker configuration, Dolby Atmos height virtualization is combined with surround virtualization to create an enveloping 360-degree audio minus the speakers that would ordinarily be employed behind or to the side of the listener.

■ DTS

Dialog Control

Gives you control of the listening experience. You can lift the dialog out from the background sounds when clarity and intelligibility are desired. This requires that content has been authored to support Dialog Control.

DTS

This is an abbreviation of Digital Theater System, which is a digital audio system developed by DTS. DTS delivers a powerful and dynamic surround sound experience, and is found in the world's finest movie theaters and screening rooms.

DTS 96/24

DTS 96/24 is a digital audio format enabling high sound quality playback in 5.1-channels with a sampling frequency of 96 kHz and 24 bit quantization on DVD-Video.

DTS Digital Surround

DTS™ Digital Surround is the standard digital surround format of DTS, Inc., compatible with a sampling frequency of 44.1 or 48 kHz and up to 5.1-channels of digital discrete surround sound.

DTS-ES™ Discrete 6.1

DTS-ES™ Discrete 6.1 is a 6.1-channel discrete digital audio format adding a surround back (SB) channel to the DTS digital surround sound. Decoding of conventional 5.1-channel audio signals is also possible according to the decoder.

DTS-ES™ Matrix 6.1

DTS-ES™ Matrix 6.1 is a 6.1-channel audio format that inserts a surround back (SB) channel to the DTS digital surround sound through matrix encoding. Decoding of conventional 5.1-channel audio signals is also possible according to the decoder.

DTS Express

DTS Express is an audio format supporting low bit rates (max. 5.1-channels, 24 to 256 kbps).

DTS-HD

This audio technology provides higher sound quality and enhanced functionality than the conventional DTS and is adopted as an optional audio for Blu-ray Disc.

This technology supports multi-channel, high data transfer speed, high sampling frequency, and lossless audio playback. Maximum 7.1-channels are supported in Blu-ray Disc.

DTS-HD High Resolution Audio

DTS-HD High Resolution Audio is an improved version of the conventional DTS, DTS-ES and DTS 96/24 signals formats, compatible with sampling frequencies of 96 or 48 kHz and up to 7.1-channels of discrete digital sound. High data bit rate performance provides high quality sound. This format is fully compatible with conventional products, including conventional DTS digital surround 5.1-channel data.

DTS-HD Master Audio

DTS-HD Master Audio is a lossless audio format created by Digital Theater System (DTS). This format provides the facility to support up to 8 audio channels with a sampling frequency of 96 kHz/24 bit resolution and up to 6 audio channels with a sampling frequency of 192 kHz/24 bit resolution. It is fully compatible with conventional products, including conventional DTS digital surround 5.1-channel data.

DTS:X

DTS:X produces a hemisphere of audio, where flyovers as well as ambient backgrounds become truly enveloping. DTS:X objects enable audio to move smoothly from one speaker to any other creating life-like realism.

DTS Neural:X

Enables an immersive audio experience for older content. DTS Neural:X can upmix your stereo, 5.1 or 7.1 content to take full advantage of all speakers in your surround sound system.

DTS Virtual:X

DTS Virtual:X allows you to enjoy multi-dimensional sound regardless of room size, layout, or speaker configuration.

■ Audio

Apple Lossless Audio Codec

This is a codec for lossless audio compression method developed by Apple Inc. This codec can be played back on iTunes, iPod or iPhone. Data compressed to approximately 60 – 70 % can be decompressed to exactly the same original data.

FLAC (Free Lossless Audio Codec)

FLAC stands for Free lossless Audio Codec, and is a lossless free audio file format. Lossless means that the audio is compressed without any loss in quality.

The FLAC license is as shown below.

Copyright (C) 2000, 2001, 2002, 2003, 2004, 2005, 2006, 2007, 2008, 2009 Josh Coalson

Redistribution and use in source and binary forms, with or without modification, are permitted provided that the following conditions are met:

- Redistributions of source code must retain the above copyright notice, this list of conditions and the following disclaimer.
- Redistributions in binary form must reproduce the above copyright notice, this list of conditions and the following disclaimer in the documentation and/or other materials provided with the distribution.
- Neither the name of the Xiph.org Foundation nor the names of its contributors may be used to endorse or promote products derived from this software without specific prior written permission.

THIS SOFTWARE IS PROVIDED BY THE COPYRIGHT HOLDERS AND CONTRIBUTORS “AS IS” AND ANY EXPRESS OR IMPLIED WARRANTIES, INCLUDING, BUT NOT LIMITED TO, THE IMPLIED WARRANTIES OF MERCHANTABILITY AND FITNESS FOR A PARTICULAR PURPOSE ARE DISCLAIMED. IN NO EVENT SHALL THE FOUNDATION OR CONTRIBUTORS BE LIABLE FOR ANY DIRECT, INDIRECT, INCIDENTAL, SPECIAL, EXEMPLARY, OR CONSEQUENTIAL DAMAGES (INCLUDING, BUT NOT LIMITED TO, PROCUREMENT OF SUBSTITUTE GOODS OR SERVICES; LOSS OF USE, DATA, OR PROFITS; OR BUSINESS INTERRUPTION) HOWEVER CAUSED AND ON ANY THEORY OF LIABILITY, WHETHER IN CONTRACT, STRICT LIABILITY, OR TORT (INCLUDING NEGLIGENCE OR OTHERWISE) ARISING IN ANY WAY OUT OF THE USE OF THIS SOFTWARE, EVEN IF ADVISED OF THE POSSIBILITY OF SUCH DAMAGE.

LFE

This is an abbreviation of Low Frequency Effect, which is an output channel that emphasizes low frequency effect sound. Surround audio is intensified by outputting 20 Hz to 120 Hz deep bass to the system subwoofer(s).

MP3 (MPEG Audio Layer-3)

This is an internationally standardized audio data compression scheme, using the “MPEG-1” video compression standard. It compresses the data volume to about one eleventh its original size while maintaining sound quality equivalent to a music CD.

MPEG (Moving Picture Experts Group), MPEG-2, MPEG-4

These are the names for digital compression format standards used for the encoding of video and audio. Video standards include “MPEG-1 Video”, “MPEG-2 Video”, “MPEG-4 Visual”, “MPEG-4 AVC”. Audio standards include “MPEG-1 Audio”, “MPEG-2 Audio”, “MPEG-4 AAC”.

WMA (Windows Media Audio)

This is audio compression technology developed by Microsoft Corporation.

WMA data can be encoded using Windows Media® Player.

To encode WMA files, only use applications authorized by Microsoft Corporation. If you use an unauthorized application, the file may not work properly.

Sampling frequency

Sampling involves taking a reading of a sound wave (analog signal) at regular intervals and expressing the height of the wave at each reading in digitized format (producing a digital signal).

The number of readings taken in one second is called the “sampling frequency”. The larger the value, the closer the reproduced sound is to the original.

Speaker impedance

This is an AC resistance value, indicated in Ω (ohms).

Greater power can be obtained when this value is smaller.

Dialogue normalization function

This function operates automatically during playback of Dolby Digital, Dolby Digital Plus, Dolby TrueHD, Dolby Atmos, DTS or DTS-HD sources. It automatically corrects the standard signal level for individual program sources.

Dynamic range

The difference between the maximum undistorted sound level and the minimum discernible level above the noise emitted by the device.

Downmix

This function converts the number of channels of surround audio to a lower number of channels and plays back according to the system’s configuration.

■ Video

ISF

ISF (Imaging Science Foundation) is an organization that certifies video technicians who are then qualified to carry out calibration and adjustment to match the installation conditions. It also sets quality standards for the optimization of device video performance.

Progressive (sequential scanning)

This is a scanning system of the video signal that displays 1 frame of video as one image. Compared to the interlace system, this system provides images with less flickering and jagged edges.

■ Network

AirPlay

AirPlay sends (plays) contents recorded in iTunes or on an iPhone/iPod touch/iPad to a compatible device via the network.

WEP Key (network key)

This is key information used for encrypting data when conducting data transfer. On this unit, the same WEP key is used for data encryption and decryption, so the same WEP key must be set on both devices in order for communications to be established between them.

Wi-Fi®

Wi-Fi Certification assures tested and proven interoperability by the Wi-Fi Alliance, a group certifying interoperability among wireless LAN devices.

WPA (Wi-Fi Protected Access)

This is a security standard established by the Wi-Fi Alliance. In addition to the conventional SSID (network name) and WEP key (network key), it also uses a user identification function and encrypting protocol for stronger security.

WPA2 (Wi-Fi Protected Access 2)

This is a new version of the WPA established by the Wi-Fi Alliance, compatible with more secure AES encryption.

WPA-PSK/WPA2-PSK (Pre-shared Key)

This is a simple authentication system for mutual authentication when a preset character string matches on the wireless LAN access point and client.

Network Names (SSID: Service Set Identifier)

When forming wireless LAN networks, groups are formed to prevent interference, data theft, etc. These groups are based on “SSID (network names)”. For enhanced security, a WEP key is set so that communication is unavailable unless both the “SSID” and the WEP key match. This is suitable for constructing a simplified network.

■ Others

HDCP

When transmitting digital signals between devices, this copyright protection technology encrypts the signals to prevent content from being copied without authorization.

MAIN ZONE

The room where this unit is placed is called the MAIN ZONE.

Pairing

Pairing (registration) is an operation that is required in order to connect a Bluetooth device to this unit using Bluetooth. When paired, the devices authenticate each other and can connect without mistaken connections occurring.
When using Bluetooth connection for the first time, you need to pair this unit and the Bluetooth device to be connected.

Protection circuit

This is a function to prevent damage to devices within the power supply when an abnormality such as an overload, excess voltage occurs or over temperature for any reason.

Trademark information

Apple, AirPlay, iPad, iPad Air, iPad Pro and iPhone are trademarks of Apple Inc., registered in the U.S. and other countries.

The trademark "iPhone" is used in Japan with a license from Aiphone K.K.

Use of the Works with Apple badge means that an accessory has been designed to work specifically with the technology identified in the badge and has been certified by the developer to meet Apple performance standards.

Manufactured under license from Audyssey Laboratories™. U.S. and foreign patents pending. Audyssey MultEQ®, Audyssey Dynamic EQ® and Audyssey Dynamic Volume® are registered trademarks of Audyssey Laboratories.

The Bluetooth® word mark and logos are registered trademarks owned by the Bluetooth SIG, Inc. and any use of such marks by D&M Holdings Inc. is under license. Other trademarks and trade names are those of their respective owners.

Manufactured under license from Dolby Laboratories.
Dolby, Dolby Atmos, Dolby Audio, Dolby Surround, Dolby Vision, and the double-D symbol are trademarks of Dolby Laboratories.

For DTS patents, see **http://patents.dts.com**. Manufactured under license from DTS, Inc. DTS, the Symbol, DTS and the Symbol together, DTS:X, the DTS:X logo, Virtual:X, and the DTS Virtual:X logo are registered trademarks and/or trademarks of DTS, Inc. in the United States and/or other countries. © DTS, Inc. All Rights Reserved.

The terms HDMI, HDMI High-Definition Multimedia Interface, and the HDMI Logo are trademarks or registered trademarks of HDMI Licensing Administrator, Inc.

The Wi-Fi CERTIFIED logo is a registered trademark of the Wi-Fi Alliance.
Wi-Fi Certification provides assurance that the device has passed the interoperability test conducted by the Wi-Fi Alliance, a group that certifies interoperability among wireless LAN devices.

Specifications

■ Audio section

- **Power amplifier**

Rated output:

Front:
50 W + 50 W (8 Ω/ohms, 20 Hz – 20 kHz with 0.08 % T.H.D.)
70 W + 70 W (6 Ω/ohms, 1 kHz with 0.7 % T.H.D.)
Center:
50 W (8 Ω/ohms, 20 Hz – 20 kHz with 0.08 % T.H.D.)
70 W (6 Ω/ohms, 1 kHz with 0.7 % T.H.D.)
Surround:
50 W + 50 W (8 Ω/ohms, 20 Hz – 20 kHz with 0.08 % T.H.D.)
70 W + 70 W (6 Ω/ohms, 1 kHz with 0.7 % T.H.D.)
Surround back:
50 W + 50 W (8 Ω/ohms, 20 Hz – 20 kHz with 0.08 % T.H.D.)
70 W + 70 W (6 Ω/ohms, 1 kHz with 0.7 % T.H.D.)

Output connectors:

4 – 16 Ω/ohms

- **Analog**

Input sensitivity:	130 mV
Frequency response:	10 Hz – 100 kHz — +1, –3 dB (Direct mode)
S/N:	98 dB (IHF–A weighted, Direct mode)

- **Phono equalizer**

Input sensitivity:	2.5 mV
RIAA deviation:	±1 dB (20 Hz to 20 kHz)
S/N:	74 dB (IHF-A)
Distortion factor:	0.03 % (1 kHz, 3 V)

■ Video section

- **Standard video connectors**

Input/output level and impedance:	1 Vp-p, 75 Ω/ohms
Frequency response:	5 Hz – 10 MHz — 0, –3 dB

- **Color component video connector**

Input/output level and impedance:	Y signal — 1 Vp-p, 75 Ω/ohms P_B / C_B signal — 0.7 Vp-p, 75 Ω/ohms P_R / C_R signal — 0.7 Vp-p, 75 Ω/ohms
Frequency response:	5 Hz – 60 MHz — 0, –3 dB

■ Tuner section

	[FM]	[AM]
	(Note: µV at 75 Ω/ohms, 0 dBf = 1 x 10^{-15} W)	
Reception frequency range:	87.5 MHz – 108.0 MHz	522 kHz – 1611 kHz
Effective sensitivity:	1.2 µV (12.8 dBf)	18 µV
50 dB sensitivity:	MONO — 2.8 µV (20.2 dBf)	
S/N ratio:	MONO — 70 dB (IHF–A weighted, Direct mode) STEREO — 67 dB (IHF–A weighted, Direct mode)	
Distortion:	MONO — 0.7 % (1 kHz) STEREO — 1.0 % (1 kHz)	

■ Wireless LAN section

Network type (wireless LAN standard):	Conforming to IEEE 802.11a/b/g/n (Wi-Fi® compliant) *1
Security:	WEP 64 bit, WEP 128 bit WPA/WPA2-PSK (AES) WPA/WPA2-PSK (TKIP)
Used frequency range:	2.4 GHz, 5 GHz

*1 The Wi-Fi® CERTIFIED Logo and the Wi-Fi CERTIFIED On-Product Logo are registered trademarks of the Wi-Fi Alliance.

■ Bluetooth section

Communications system:	Bluetooth Specification Version 4.1
Transmission power:	Bluetooth Specification Power Class 1
Maximum communication range:	Approx. 30 m in line of sight *2
Used frequency range:	2.4 GHz
Modulation scheme:	FHSS (Frequency-Hopping Spread Spectrum)
Supported profiles:	A2DP (Advanced Audio Distribution Profile) 1.2
	AVRCP (Audio Video Remote Control Profile) 1.5
Corresponding codec:	SBC
Transmission range (A2DP):	20 Hz – 20,000 Hz

*2 The actual communication range varies depending on the influence of such factors as obstructions between devices, electromagnetic waves from microwave ovens, static electricity, cordless phones, reception sensitivity, antenna performance, operating system, application software etc.

■ General

Operating temperature: 5 °C - 35 °C

Power supply: AC 230 V, 50/60 Hz

Power consumption: 250 W

Power consumption in standby modes:

Standby modes	Setting items in the menu			Power consumption
	Network Control (☞ p. 207)	Allow Update (☞ p. 218)	HDMI Pass Through (☞ p. 166) / HDMI Control (☞ p. 168)	
Normal standby	Off In Standby	Off	Off	0.1 W
Network control (Bluetooth)	Always On	–	Off	3.3 W
Network control (Ethernet)	Always On	–	Off	3.4 W
Network control (Wi-Fi)	Always On	–	Off	3.7 W
CEC standby	Off In Standby	Off	On	0.5 W

For purposes of improvement, specifications and design are subject to change without notice.

■ Dimensions (Unit : mm)

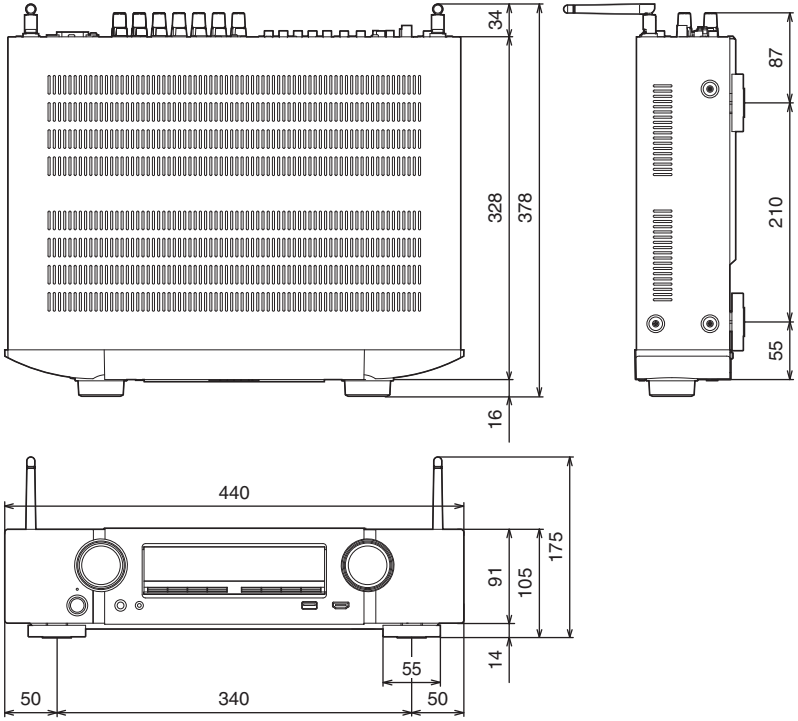

■ Weight : 8.4 kg

Index

☞ Numerics

3D 249
4K 249
5.1-channel 34, 42
7.1-channel 34, 43

☞ A

AirPlay 107
All Zone Stereo 118
Audio formats 251, 254, 256, 257
Audio settings 148, 153
Audyssey Dynamic EQ® 266
Audyssey Dynamic Volume® 266
Audyssey MultEQ® 266
Audyssey settings 160, 183
Audyssey® Setup 181
Auto sound mode 122
Auto Standby 213

☞ B

Bi-amp 49
Bluetooth device 78
Blu-ray Disc player 59, 72

☞ C

Cable TV 58

☞ D

Direct sound mode 126
Display 20
Dolby Atmos 267
Dolby sound mode 123, 267
DTS sound mode 124, 269
DVD player 59, 72

☞ E

ECO Mode 210
External control device 67

☞ F

Firmware Update 217
FM/AM antenna 63, 82
Front panel 17

☞ G

Game console 60
General settings 151, 210

☞ H

HDCP 251
HDMI Control 131, 168
HEOS Account 99, 209
HEOS Favorites 112

☞ I

Input Assign 177
Input settings 149, 177
Input signal 263
Input source 71
Internet Radio 92

☞ L

Listening position 181

☞ M

M-DAX 157
Menu map 148
Muting 72

☞ N

NAS 94
Network settings 202

☞ O

Original sound mode 125

☞ P

Pairing 78, 79
PC 94
PCM multi-channel sound mode 125
Picture Mode 164
Protection circuit 274
Pure direct 121

☞ Q

Queue 74, 95, 102

☞ R

Rear panel 22
Remote control unit 26
Resetting factory settings 247
Resetting network settings 248

☞ S

Satellite tuner 58
Set-top box 58
Setup Assistant 151
Sleep timer 134
Smart select 136
Sound mode 120, 258, 260
Speaker connection 37
Speaker settings 149, 181
Spotify 110
Stereo sound mode 126

☞ T

Tips 226
Troubleshooting 228
TV 53, 55, 56

☞ U

USB memory device 62, 73

☞ V

Video camcorder 60
Video Select 116
Video settings 148, 164
Volume 72, 114

☞ W

Web control 142
Wi-Fi settings 203
Wired LAN 65, 202
Wireless LAN 66, 203

☞ Z

ZONE2 ..... 51, 144

License

License information for the software used in the unit

About GPL (GNU-General Public License), LGPL (GNU Lesser General Public License) License

This product uses GPL/LGPL software and software made by other companies.

After you purchase this product, you may procure, modify or distribute the source code of the GPL/LGPL software that is used in the product.

Marantz provides the source code based on the GPL and LPGL licenses at the actual cost upon your request to our customer service center. However, note that we make no guarantees concerning the source code. Please also understand that we do not offer support for the contents of the source code.

This section describes software license used for this unit. To maintain the correct content, the original (English) is used.

GPL

Open Source Used	Version
bridge-utils	2.8
busybox	1.21.1
ebtables	2.0.10-4
Linux kernel	3.10.74
mtd-utils	1.4.3
ntfs-3g_ntfsprogs	2011.4.12
ntpclient	2007
u-boot	2015.01
wireless-tools	version 29

LGPL

Open Source Used	Version
ffmpeg	0.8.3
glibc	2.9
libmms	0.6.2
QT	5.4.2
cifs-units	6.7

Babel

MIT License

Copyright (c) 2014-2018 Sebastian McKenzie <sebmck@gmail.com>

Permission is hereby granted, free of charge, to any person obtaining a copy of this software and associated documentation files (the "Software"), to deal in the Software without restriction, including without limitation the rights to use, copy, modify, merge, publish, distribute, sublicense, and/or sell copies of the Software, and to permit persons to whom the Software is furnished to do so, subject to the following conditions:

The above copyright notice and this permission notice shall be included in all copies or substantial portions of the Software.

THE SOFTWARE IS PROVIDED "AS IS", WITHOUT WARRANTY OF ANY KIND, EXPRESS OR IMPLIED, INCLUDING BUT NOT LIMITED TO THE WARRANTIES OF MERCHANTABILITY, FITNESS FOR A PARTICULAR PURPOSE AND NONINFRINGEMENT. IN NO EVENT SHALL THE AUTHORS OR COPYRIGHT HOLDERS BE LIABLE FOR ANY CLAIM, DAMAGES OR OTHER LIABILITY, WHETHER IN AN ACTION OF CONTRACT, TORT OR OTHERWISE, ARISING FROM, OUT OF OR IN CONNECTION WITH THE SOFTWARE OR THE USE OR OTHER DEALINGS IN THE SOFTWARE.

curl-7.24.0

COPYRIGHT AND PERMISSION NOTICE

Copyright (c) 1996 - 2014, Daniel Stenberg, <daniel@haxx.se>

All rights reserved.

Permission to use, copy, modify, and distribute this software for any purpose with or without fee is hereby granted, provided that the above copyright notice and this permission notice appear in all copies.

THE SOFTWARE IS PROVIDED “AS IS”, WITHOUT WARRANTY OF ANY KIND, EXPRESS OR IMPLIED, INCLUDING BUT NOT LIMITED TO THE WARRANTIES OF MERCHANTABILITY, FITNESS FOR A PARTICULAR PURPOSE AND NONINFRINGEMENT OF THIRD PARTY RIGHTS. IN NO EVENT SHALL THE AUTHORS OR COPYRIGHT HOLDERS BE LIABLE FOR ANY CLAIM, DAMAGES OR OTHER LIABILITY, WHETHER IN AN ACTION OF CONTRACT, TORT OR OTHERWISE, ARISING FROM, OUT OF OR IN CONNECTION WITH THE SOFTWARE OR THE USE OR OTHER DEALINGS IN THE SOFTWARE.

Except as contained in this notice, the name of a copyright holder shall not be used in advertising or otherwise to promote the sale, use or other dealings in this Software without prior written authorization of the copyright holder.

❑ e2fsprogs-libs-1.40.8/lib/uuid

Redistribution and use in source and binary forms, with or without modification, are permitted provided that the following conditions are met:

1. Redistributions of source code must retain the above copyright notice, and the entire permission notice in its entirety, including the disclaimer of warranties.
2. Redistributions in binary form must reproduce the above copyright notice, this list of conditions and the following disclaimer in the documentation and/or other materials provided with the distribution.
3. The name of the author may not be used to endorse or promote products derived from this software without specific prior written permission.

THIS SOFTWARE IS PROVIDED “AS IS” AND ANY EXPRESS OR IMPLIED WARRANTIES, INCLUDING, BUT NOT LIMITED TO, THE IMPLIED WARRANTIES OF MERCHANTABILITY AND FITNESS FOR A PARTICULAR PURPOSE, ALL OF WHICH ARE HEREBY DISCLAIMED. IN NO EVENT SHALL THE AUTHOR BE LIABLE FOR ANY DIRECT, INDIRECT, INCIDENTAL, SPECIAL, EXEMPLARY, OR CONSEQUENTIAL DAMAGES (INCLUDING, BUT NOT LIMITED TO, PROCUREMENT OF SUBSTITUTE GOODS OR SERVICES; LOSS OF USE, DATA, OR PROFITS; OR BUSINESS INTERRUPTION) HOWEVER CAUSED AND ON ANY THEORY OF LIABILITY, WHETHER IN CONTRACT, STRICT LIABILITY, OR TORT (INCLUDING NEGLIGENCE OR OTHERWISE) ARISING IN ANY WAY OUT OF THE USE OF THIS SOFTWARE, EVEN IF NOT ADVISED OF THE POSSIBILITY OF SUCH DAMAGE.

❑ expat-2.0.1

Copyright (c) 1998, 1999, 2000 Thai Open Source Software Center Ltd and Clark Cooper

Copyright (c) 2001, 2002, 2003, 2004, 2005, 2006 Expat maintainers.

Permission is hereby granted, free of charge, to any person obtaining a copy of this software and associated documentation files (the “Software”), to deal in the Software without restriction, including without limitation the rights to use, copy, modify, merge, publish, distribute, sublicense, and/or sell copies of the Software, and to permit persons to whom the Software is furnished to do so, subject to the following conditions:

The above copyright notice and this permission notice shall be included in all copies or substantial portions of the Software.

THE SOFTWARE IS PROVIDED “AS IS”, WITHOUT WARRANTY OF ANY KIND, EXPRESS OR IMPLIED, INCLUDING BUT NOT LIMITED TO THE WARRANTIES OF MERCHANTABILITY, FITNESS FOR A PARTICULAR PURPOSE AND NONINFRINGEMENT.

IN NO EVENT SHALL THE AUTHORS OR COPYRIGHT HOLDERS BE LIABLE FOR ANY CLAIM, DAMAGES OR OTHER LIABILITY, WHETHER IN AN ACTION OF CONTRACT, TORT OR OTHERWISE, ARISING FROM, OUT OF OR IN CONNECTION WITH THE SOFTWARE OR THE USE OR OTHER DEALINGS IN THE SOFTWARE.

❑ getopt

http://cvsweb.netbsd.org/bsdweb.cgi/src/lib/libc/stdlib/

Copyright (c) 1987, 1993, 1994 The Regents of the University of California. All rights reserved.

Redistribution and use in source and binary forms, with or without modification, are permitted provided that the following conditions are met:

1. Redistributions of source code must retain the above copyright notice, this list of conditions and the following disclaimer.
2. Redistributions in binary form must reproduce the above copyright notice, this list of conditions and the following disclaimer in the documentation and/or other materials provided with the distribution.
3. Neither the name of the University nor the names of its contributors may be used to endorse or promote products derived from this software without specific prior written permission.

THIS SOFTWARE IS PROVIDED BY THE REGENTS AND CONTRIBUTORS “AS IS” AND ANY EXPRESS OR IMPLIED WARRANTIES, INCLUDING, BUT NOT LIMITED TO, THE IMPLIED WARRANTIES OF MERCHANTABILITY AND FITNESS FOR A PARTICULAR PURPOSE ARE DISCLAIMED. IN NO EVENT SHALL THE REGENTS OR CONTRIBUTORS BE LIABLE FOR ANY DIRECT, INDIRECT, INCIDENTAL, SPECIAL, EXEMPLARY, OR CONSEQUENTIAL DAMAGES (INCLUDING, BUT NOT LIMITED TO, PROCUREMENT OF SUBSTITUTE GOODS OR SERVICES; LOSS OF USE, DATA, OR PROFITS; OR BUSINESS INTERRUPTION) HOWEVER CAUSED AND ON ANY THEORY OF LIABILITY, WHETHER IN CONTRACT, STRICT LIABILITY, OR TORT (INCLUDING NEGLIGENCE OR OTHERWISE) ARISING IN ANY WAY OUT OF THE USE OF THIS SOFTWARE, EVEN IF ADVISED OF THE POSSIBILITY OF SUCH DAMAGE.

❑ jQuery

Copyright 2014 jQuery Foundation and other contributors

http://jquery.com/

Permission is hereby granted, free of charge, to any person obtaining a copy of this software and associated documentation files (the “Software”), to deal in the Software without restriction, including without limitation the rights to use, copy, modify, merge, publish, distribute, sublicense, and/or sell copies of the Software, and to permit persons to whom the Software is furnished to do so, subject to the following conditions:

The above copyright notice and this permission notice shall be included in all copies or substantial portions of the Software.

THE SOFTWARE IS PROVIDED “AS IS”, WITHOUT WARRANTY OF ANY KIND, EXPRESS OR IMPLIED, INCLUDING BUT NOT LIMITED TO THE WARRANTIES OF MERCHANTABILITY, FITNESS FOR A PARTICULAR PURPOSE AND NONINFRINGEMENT. IN NO EVENT SHALL THE AUTHORS OR COPYRIGHT HOLDERS BE LIABLE FOR ANY CLAIM, DAMAGES OR OTHER LIABILITY, WHETHER IN AN ACTION OF CONTRACT, TORT OR OTHERWISE, ARISING FROM, OUT OF OR IN CONNECTION WITH THE SOFTWARE OR THE USE OR OTHER DEALINGS IN THE SOFTWARE.

❑ libpcap-1.4.0

License: BSD

Redistribution and use in source and binary forms, with or without modification, are permitted provided that the following conditions are met:

1. Redistributions of source code must retain the above copyright notice, this list of conditions and the following disclaimer.
2. Redistributions in binary form must reproduce the above copyright notice, this list of conditions and the following disclaimer in the documentation and/or other materials provided with the distribution.
3. The names of the authors may not be used to endorse or promote products derived from this software without specific prior written permission.

THIS SOFTWARE IS PROVIDED “AS IS” AND WITHOUT ANY EXPRESS OR IMPLIED WARRANTIES, INCLUDING, WITHOUT LIMITATION, THE IMPLIED WARRANTIES OF MERCHANTABILITY AND FITNESS FOR A PARTICULAR PURPOSE.

❑ libtar-1.2.11

Copyright (c) 1998-2003 University of Illinois Board of Trustees
Copyright (c) 1998-2003 Mark D. Roth
All rights reserved.
Developed by: Campus Information Technologies and Educational Services, University of Illinois at Urbana-Champaign
Permission is hereby granted, free of charge, to any person obtaining a copy of this software and associated documentation files (the “Software”), to deal with the Software without restriction, including without limitation the rights to use, copy, modify, merge, publish, distribute, sublicense, and/or sell copies of the Software, and to permit persons to whom the Software is furnished to do so, subject to the following conditions:

- Redistributions of source code must retain the above copyright notice, this list of conditions and the following disclaimers.
- Redistributions in binary form must reproduce the above copyright notice, this list of conditions and the following disclaimers in the documentation and/or other materials provided with the distribution.
- Neither the names of Campus Information Technologies and Educational Services, University of Illinois at Urbana-Champaign, nor the names of its contributors may be used to endorse or promote products derived from this Software without specific prior written permission.

THE SOFTWARE IS PROVIDED “AS IS”, WITHOUT WARRANTY OF ANY KIND, EXPRESS OR IMPLIED, INCLUDING BUT NOT LIMITED TO THE WARRANTIES OF MERCHANTABILITY, FITNESS FOR A PARTICULAR PURPOSE AND NONINFRINGEMENT.
IN NO EVENT SHALL THE CONTRIBUTORS OR COPYRIGHT HOLDERS BE LIABLE FOR ANY CLAIM, DAMAGES OR OTHER LIABILITY, WHETHER IN AN ACTION OF CONTRACT, TORT OR OTHERWISE, ARISING FROM, OUT OF OR IN CONNECTION WITH THE SOFTWARE OR THE USE OR OTHER DEALINGS WITH THE SOFTWARE.

❑ mDNS 320.10.80

The majority of the source code in the mDNSResponder project is licensed under the terms of the Apache License, Version 2.0, available from:

<http://www.apache.org/licenses/LICENSE-2.0>

To accommodate license compatibility with the widest possible range of client code licenses, the shared library code, which is linked at runtime into the same address space as the client using it, is licensed under the terms of the “Three-Clause BSD License”.

The Linux Name Service Switch code, contributed by National ICT Australia Ltd (NICTA) is licensed under the terms of the NICTA Public Software Licence (which is substantially similar to the “Three-Clause BSD License”, with some additional language pertaining to Australian law).

❑ mongoose

https://github.com/cesanta/mongoose/

Copyright (c) 2004-2013 Sergey Lyubka

Permission is hereby granted, free of charge, to any person obtaining a copy of this software and associated documentation files (the “Software”), to deal in the Software without restriction, including without limitation the rights to use, copy, modify, merge, publish, distribute, sublicense, and/or sell copies of the Software, and to permit persons to whom the Software is furnished to do so, subject to the following conditions:

The above copyright notice and this permission notice shall be included in all copies or substantial portions of the Software.

THE SOFTWARE IS PROVIDED “AS IS”, WITHOUT WARRANTY OF ANY KIND, EXPRESS OR IMPLIED, INCLUDING BUT NOT LIMITED TO THE WARRANTIES OF MERCHANTABILITY, FITNESS FOR A PARTICULAR PURPOSE AND NONINFRINGEMENT. IN NO EVENT SHALL THE AUTHORS OR COPYRIGHT HOLDERS BE LIABLE FOR ANY CLAIM, DAMAGES OR OTHER LIABILITY, WHETHER IN AN ACTION OF CONTRACT, TORT OR OTHERWISE, ARISING FROM, OUT OF OR IN CONNECTION WITH THE SOFTWARE OR THE USE OR OTHER DEALINGS IN THE SOFTWARE.

❑ openssl-1.0.0d

Copyright (c) 1998-2011 The OpenSSL Project. All rights reserved.

Redistribution and use in source and binary forms, with or without modification, are permitted provided that the following conditions are met:

1. Redistributions of source code must retain the above copyright notice, this list of conditions and the following disclaimer.
2. Redistributions in binary form must reproduce the above copyright notice, this list of conditions and the following disclaimer in the documentation and/or other materials provided with the distribution.
3. All advertising materials mentioning features or use of this software must display the following acknowledgment:
   “This product includes software developed by the OpenSSL Project for use in the OpenSSL Toolkit. (**http://www.openssl.org/**)”
4. The names “OpenSSL Toolkit” and “OpenSSL Project” must not be used to endorse or promote products derived from this software without prior written permission. For written permission, please contact openssl-core@openssl.org.
5. Products derived from this software may not be called “OpenSSL” nor may “OpenSSL” appear in their names without prior written permission of the OpenSSL Project.
6. Redistributions of any form whatsoever must retain the following acknowledgment:
   “This product includes software developed by the OpenSSL Project for use in the OpenSSL Toolkit (**http://www.openssl.org/**)”

THIS SOFTWARE IS PROVIDED BY THE OpenSSL PROJECT “AS IS” AND ANY EXPRESSED OR IMPLIED WARRANTIES, INCLUDING, BUT NOT LIMITED TO, THE IMPLIED WARRANTIES OF MERCHANTABILITY AND FITNESS FOR A PARTICULAR PURPOSE ARE DISCLAIMED. IN NO EVENT SHALL THE OpenSSL PROJECT OR ITS CONTRIBUTORS BE LIABLE FOR ANY DIRECT, INDIRECT, INCIDENTAL, SPECIAL, EXEMPLARY, OR CONSEQUENTIAL DAMAGES (INCLUDING, BUT NOT LIMITED TO, PROCUREMENT OF SUBSTITUTE GOODS OR SERVICES; LOSS OF USE, DATA, OR PROFITS; OR BUSINESS INTERRUPTION) HOWEVER CAUSED AND ON ANY THEORY OF LIABILITY, WHETHER IN CONTRACT, STRICT LIABILITY, OR TORT (INCLUDING NEGLIGENCE OR OTHERWISE) ARISING IN ANY WAY OUT OF THE USE OF THIS SOFTWARE, EVEN IF ADVISED OF THE POSSIBILITY OF SUCH DAMAGE.

This product includes cryptographic software written by Eric Young (eay@cryptsoft.com). This product includes software written by Tim Hudson (tjh@cryptsoft.com).

❑ portmap-6.0

Copyright (c) 1990 The Regents of the University of California.

- All rights reserved.
- Redistribution and use in source and binary forms, with or without modification, are permitted provided that the following conditions are met:

1. Redistributions of source code must retain the above copyright notice, this list of conditions and the following disclaimer.
2. Redistributions in binary form must reproduce the above copyright notice, this list of conditions and the following disclaimer in the documentation and/or other materials provided with the distribution.
3. A ll advertising materials mentioning features or use of this software must display the following acknowledgement:
   This product includes software developed by the University of California, Berkeley and its contributors.
4. Neither the name of the University nor the names of its contributors may be used to endorse or promote products derived from this software without specific prior written permission.

- THIS SOFTWARE IS PROVIDED BY THE REGENTS AND CONTRIBUTORS “AS IS” AND ANY EXPRESS OR IMPLIED WARRANTIES, INCLUDING, BUT NOT LIMITED TO, THE IMPLIED WARRANTIES OF MERCHANTABILITY AND FITNESS FOR A PARTICULAR PURPOSE ARE DISCLAIMED. IN NO EVENT SHALL THE REGENTS OR CONTRIBUTORS BE LIABLE FOR ANY DIRECT, INDIRECT, INCIDENTAL, SPECIAL, EXEMPLARY, OR CONSEQUENTIAL DAMAGES (INCLUDING, BUT NOT LIMITED TO, PROCUREMENT OF SUBSTITUTE GOODS OR SERVICES; LOSS OF USE, DATA, OR PROFITS; OR BUSINESS INTERRUPTION) HOWEVER CAUSED AND ON ANY THEORY OF LIABILITY, WHETHER IN CONTRACT, STRICT LIABILITY, OR TORT (INCLUDING NEGLIGENCE OR OTHERWISE) ARISING IN ANY WAY OUT OF THE USE OF THIS SOFTWARE, EVEN IF ADVISED OF THE POSSIBILITY OF SUCH DAMAGE.

❑ pstdint.h-0.1.12

- BSD License:
- Copyright (c) 2005-2011 Paul Hsieh
- All rights reserved.
- Redistribution and use in source and binary forms, with or without modification, are permitted provided that the following conditions are met:

1. Redistributions of source code must retain the above copyright notice, this list of conditions and the following disclaimer.
2. Redistributions in binary form must reproduce the above copyright notice, this list of conditions and the following disclaimer in the documentation and/or other materials provided with the distribution.
3. The name of the author may not be used to endorse or promote products derived from this software without specific prior written permission.

- THIS SOFTWARE IS PROVIDED BY THE AUTHOR “AS IS” AND ANY EXPRESS OR IMPLIED WARRANTIES, INCLUDING, BUT NOT LIMITED TO, THE IMPLIED WARRANTIES OF MERCHANTABILITY AND FITNESS FOR A PARTICULAR PURPOSE ARE DISCLAIMED.
- IN NO EVENT SHALL THE AUTHOR BE LIABLE FOR ANY DIRECT, INDIRECT, INCIDENTAL, SPECIAL, EXEMPLARY, OR CONSEQUENTIAL DAMAGES (INCLUDING, BUT NOT LIMITED TO, PROCUREMENT OF SUBSTITUTE GOODS OR SERVICES; LOSS OF USE, DATA, OR PROFITS; OR BUSINESS INTERRUPTION) HOWEVER CAUSED AND ON ANY THEORY OF LIABILITY, WHETHER IN CONTRACT, STRICT LIABILITY, OR TORT (INCLUDING NEGLIGENCE OR OTHERWISE) ARISING IN ANY WAY OUT OF THE USE OF THIS SOFTWARE, EVEN IF ADVISED OF THE POSSIBILITY OF SUCH DAMAGE.

❑ rl78flash 2000.3.1

License

=======

The MIT License (MIT)

Copyright (c) 2012 Maxim Salov

Permission is hereby granted, free of charge, to any person obtaining a copy of this software and associated documentation files (the “Software”), to deal in the Software without restriction, including without limitation the rights to use, copy, modify, merge, publish, distribute, sublicense, and/or sell copies of the Software, and to permit persons to whom the Software is furnished to do so, subject to the following conditions:

The above copyright notice and this permission notice shall be included in all copies or substantial portions of the Software.

THE SOFTWARE IS PROVIDED “AS IS”, WITHOUT WARRANTY OF ANY KIND, EXPRESS OR IMPLIED, INCLUDING BUT NOT LIMITED TO THE WARRANTIES OF MERCHANTABILITY, FITNESS FOR A PARTICULAR PURPOSE AND NONINFRINGEMENT. IN NO EVENT SHALL THE AUTHORS OR COPYRIGHT HOLDERS BE LIABLE FOR ANY CLAIM, DAMAGES OR OTHER LIABILITY, WHETHER IN AN ACTION OF CONTRACT, TORT OR OTHERWISE, ARISING FROM, OUT OF OR IN CONNECTION WITH THE SOFTWARE OR THE USE OR OTHER DEALINGS IN THE SOFTWARE.

❑ sqlite 2003.5.7

SQLite Copyright

SQLite is in the

Public Domain

All of the code and documentation in SQLite has been dedicated to the public domain by the authors. All code authors, and representatives of the companies they work for, have signed affidavits dedicating their contributions to the public domain and originals of those signed affidavits are stored in a firesafe at the main offices of Hwaci. Anyone is free to copy, modify, publish, use, compile, sell, or distribute the original SQLite code, either in source code form or as a compiled binary, for any purpose, commercial or non-commercial, and by any means.

The previous paragraph applies to the deliverable code and documentation in SQLite - those parts of the SQLite library that you actually bundle and ship with a larger application. Some scripts used as part of the build process (for example the “configure” scripts generated by autoconf) might fall under other open-source licenses. Nothing from these build scripts ever reaches the final deliverable SQLite library, however, and so the licenses associated with those scripts should not be a factor in assessing your rights to copy and use the SQLite library.

All of the deliverable code in SQLite has been written from scratch. No code has been taken from other projects or from the open internet. Every line of code can be traced back to its original author, and all of those authors have public domain dedications on file. So the SQLite code base is clean and is uncontaminated with licensed code from other projects.

strlcpy.c , v1.11

- Copyright (c) 1998 Todd C. Miller <Todd.Miller@courtesan.com>
- Permission to use, copy, modify, and distribute this software for any purpose with or without fee is hereby granted, provided that the above copyright notice and this permission notice appear in all copies.
- THE SOFTWARE IS PROVIDED “AS IS” AND THE AUTHOR DISCLAIMS ALL WARRANTIES WITH REGARD TO THIS SOFTWARE INCLUDING ALL IMPLIED WARRANTIES OF MERCHANTABILITY AND FITNESS. IN NO EVENT SHALL THE AUTHOR BE LIABLE FOR ANY SPECIAL, DIRECT, INDIRECT, OR CONSEQUENTIAL DAMAGES OR ANY DAMAGES WHATSOEVER RESULTING FROM LOSS OF USE, DATA OR PROFITS, WHETHER IN AN ACTION OF CONTRACT, NEGLIGENCE OR OTHER TORTIOUS ACTION, ARISING OUT OF OR IN CONNECTION WITH THE USE OR PERFORMANCE OF THIS SOFTWARE.

taglib-1.5

copyright : (C) 2002 - 2008 by Scott Wheeler
email : wheeler@kde.org

“The contents of this file are subject to the Mozilla Public License Version 1.1 (the “License”); you may not use this file except in compliance with the License. You may obtain a copy of the License at **http://www.mozilla.org/MPL/**

Software distributed under the License is distributed on an “AS IS” basis, WITHOUT WARRANTY OF ANY KIND, either express or implied. See the License for the specific language governing rights and limitations under the License.

tinyxml 2002.4.3

www.sourceforge.net/projects/tinyxml

This software is provided 'as-is', without any express or implied warranty. In no event will the authors be held liable for any damages arising from the use of this software.

Permission is granted to anyone to use this software for any purpose, including commercial applications, and to alter it and redistribute it freely, subject to the following restrictions:

1. The origin of this software must not be misrepresented; you must not claim that you wrote the original software. If you use this software in a product, an acknowledgment in the product documentation would be appreciated but is not required.
2. Altered source versions must be plainly marked as such, and must not be misrepresented as being the original software.
3. This notice may not be removed or altered from any source distribution.

❑ Tremor

http://wiki.xiph.org/index.php/Tremor

Copyright (c) 2002, Xiph.org Foundation

Redistribution and use in source and binary forms, with or without modification, are permitted provided that the following conditions are met:

1. Redistributions of source code must retain the above copyright notice, this list of conditions and the following disclaimer.
2. Redistributions in binary form must reproduce the above copyright notice, this list of conditions and the following disclaimer in the documentation and/or other materials provided with the distribution.
3. Neither the name of the Xiph.org Foundation nor the names of its contributors may be used to endorse or promote products derived from this software without specific prior written permission.

THIS SOFTWARE IS PROVIDED BY THE COPYRIGHT HOLDERS AND CONTRIBUTORS “AS IS” AND ANY EXPRESS OR IMPLIED WARRANTIES, INCLUDING, BUT NOT LIMITED TO, THE IMPLIED WARRANTIES OF MERCHANTABILITY AND FITNESS FOR A PARTICULAR PURPOSE ARE DISCLAIMED. IN NO EVENT SHALL THE FOUNDATION OR CONTRIBUTORS BE LIABLE FOR ANY DIRECT, INDIRECT, INCIDENTAL, SPECIAL, EXEMPLARY, OR CONSEQUENTIAL DAMAGES (INCLUDING, BUT NOT LIMITED TO, PROCUREMENT OF SUBSTITUTE GOODS OR SERVICES; LOSS OF USE, DATA, OR PROFITS; OR BUSINESS INTERRUPTION) HOWEVER CAUSED AND ON ANY THEORY OF LIABILITY, WHETHER IN CONTRACT, STRICT LIABILITY, OR TORT (INCLUDING NEGLIGENCE OR OTHERWISE) ARISING IN ANY WAY OUT OF THE USE OF THIS SOFTWARE, EVEN IF ADVISED OF THE POSSIBILITY OF SUCH DAMAGE.

❑ zlib

http://www.zlib.net/

zlib.h -- interface of the ‘zlib’ general purpose compression library version 1.2.3, July 18th, 2005

Copyright (C) 1995-2004 Jean-loup Gailly and Mark Adler

This software is provided ‘as-is’, without any express or implied warranty. In no event will the authors be held liable for any damages arising from the use of this software.

Permission is granted to anyone to use this software for any purpose, including commercial applications, and to alter it and redistribute it freely, subject to the following restrictions:

1. The origin of this software must not be misrepresented; you must not claim that you wrote the original software. If you use this software in a product, an acknowledgment in the product documentation would be appreciated but is not required.
2. Altered source versions must be plainly marked as such, and must not be misrepresented as being the original software.
3. This notice may not be removed or altered from any source distribution.

Jean-loup Gailly jloup@gzip.org, Mark Adler
madler@alumni.caltech.edu

❑ The Spotify software is subject to third party licenses found here:

www.spotify.com/connect/third-party-licenses

www.marantz.com

You can find your nearest authorized distributor or dealer on our website.

marantz® is a registered trademark.

3520 10683 00AM

Copyright © 2019 D&M Holdings Inc. All Rights Reserved.